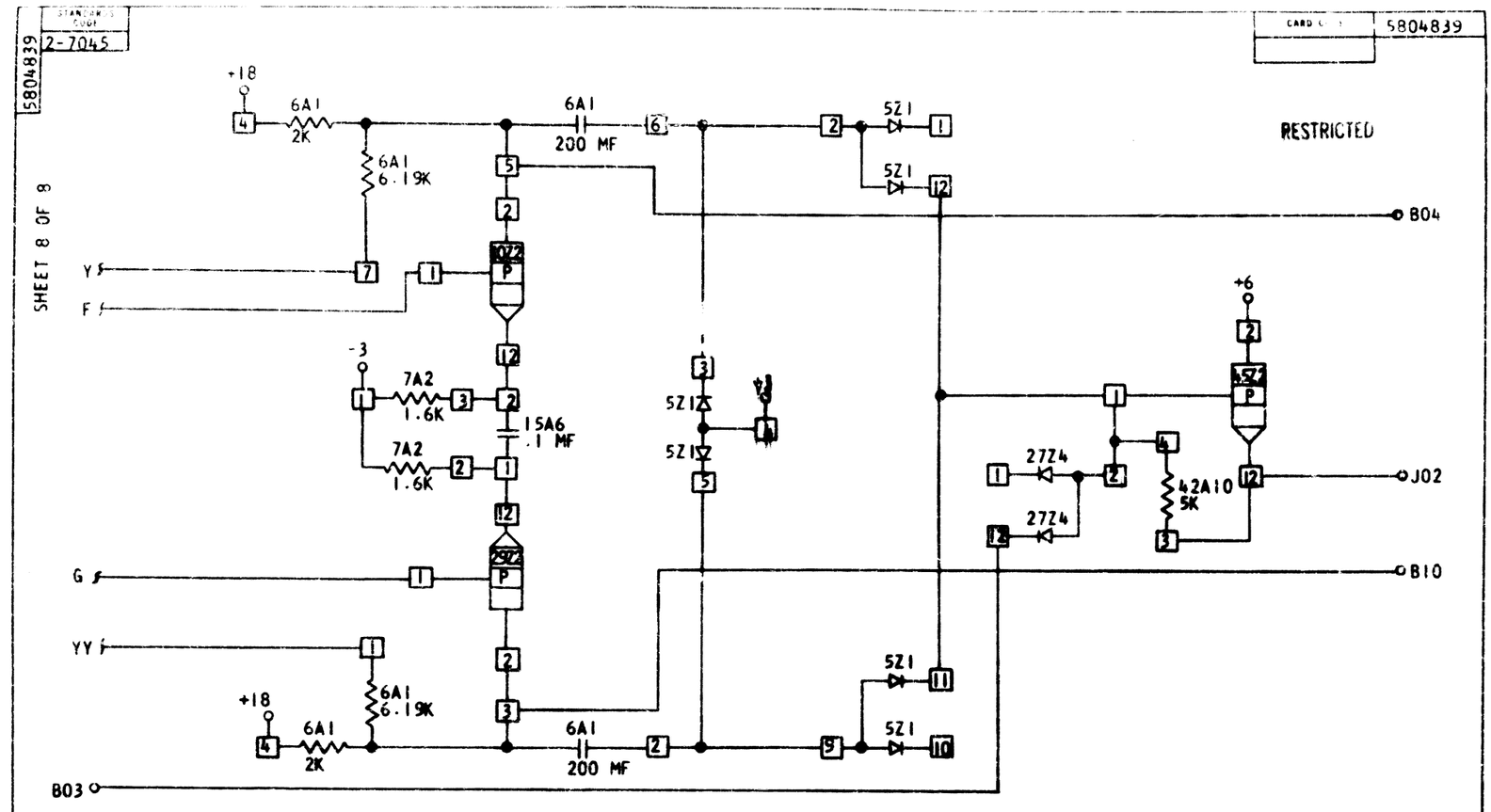

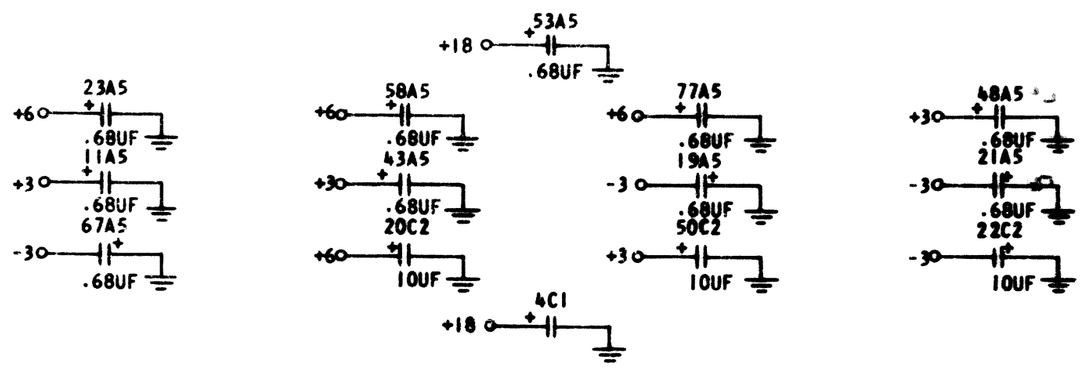

UNUSED COMPONENTS

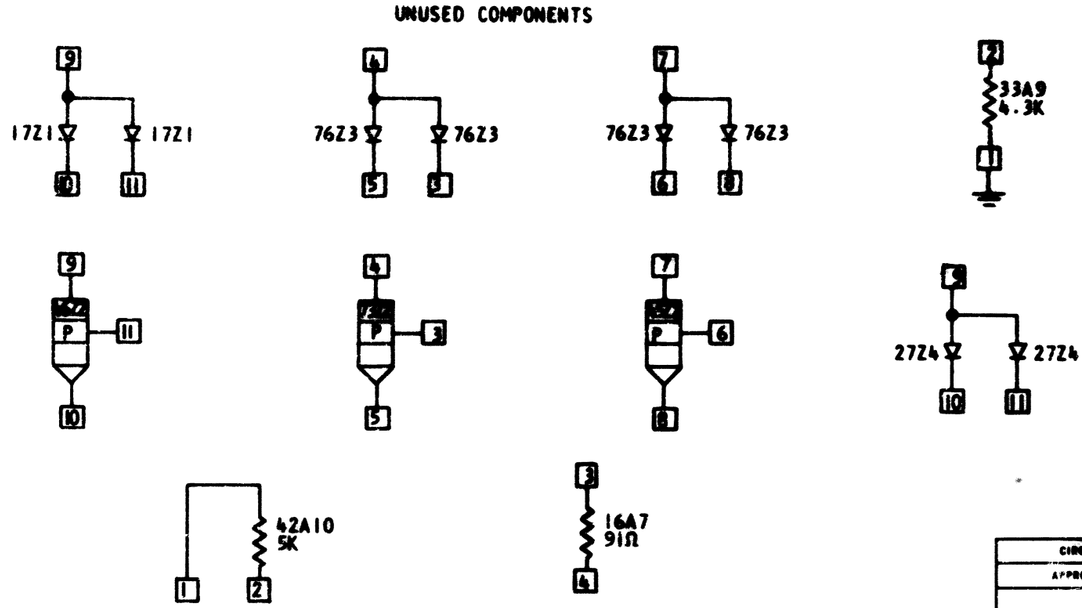

CIRCUIT AND PACKAGING STANDARD	
APPROVAL	DATE

INTERNATIONAL BUSINESS MACHINES CORP.					DATE	CHANGE NO.	APPROVAL	DATE	CHANGE NO.	APPROVAL	DEVELOPMENT NO.	5804839
NAME	MZ SA + INVERTT				9-4-64	DEV 3582		8MAR67	166541	E		
DESIGN	RLS	7-21-64	MODEL		10-15-64	161014						
DETAIL	RLS	7-21-64	SCALE	NONE	1-18-65	162395	B					
CHECK	WJS	7-21-64	DRAW	VMD 8/1964	3-2-65	163601	C					
APPRO			CHECK		18-AUG-65	165540	D					

C