5804840

STANDARDS CODE 2-7045

CARD CODE 5804840

SHEET 7 OF 8

RESTRICTED

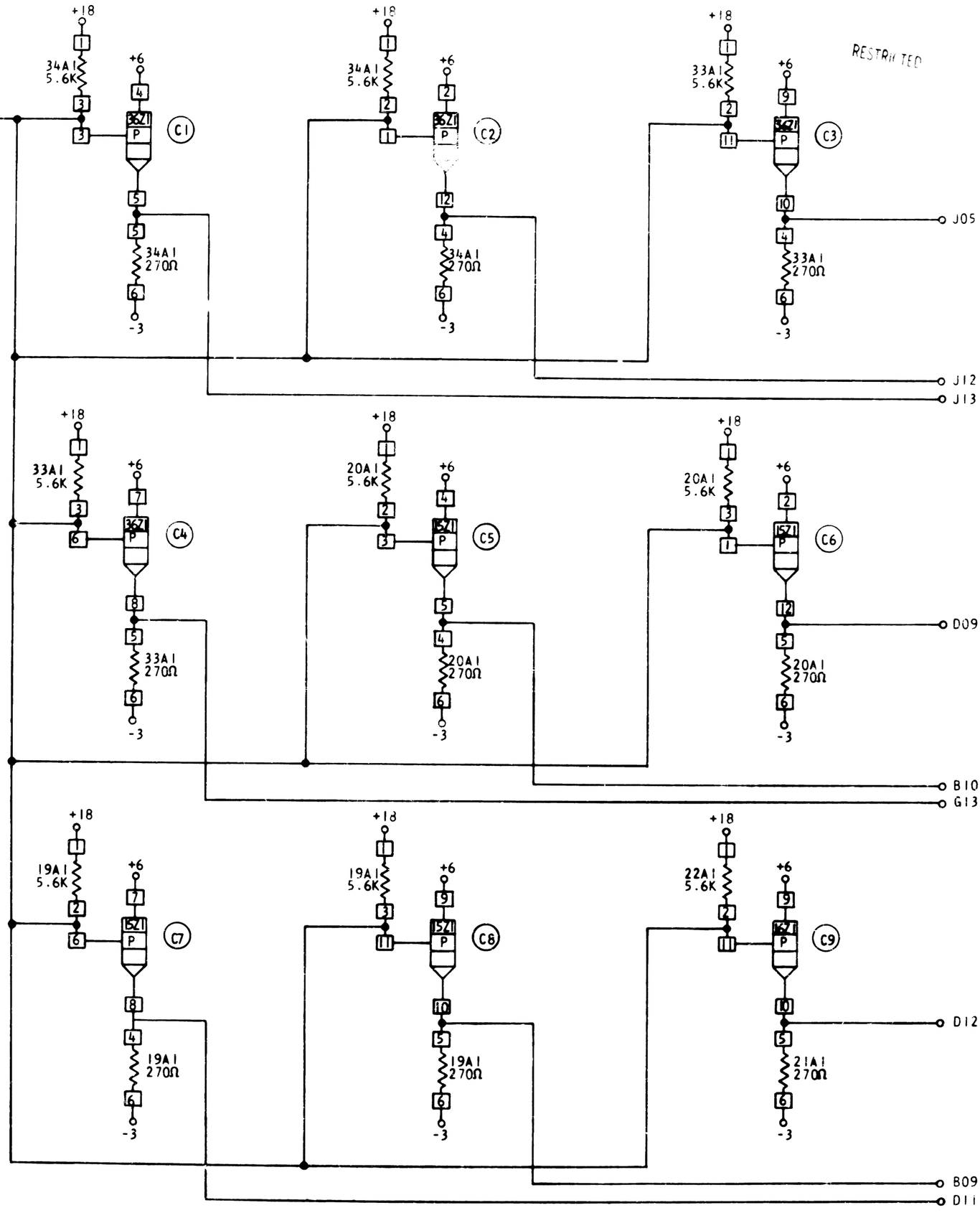

CIRCUIT AND PACKAGING STANDARD	
APPROVAL	DATE

INTERNATIONAL BUSINESS MACHINES CORP.													
NAME	M2 STROBE DRIVER			DATE	CHANGE NO.	APPROVAL	DATE	CHANGE NO.	APPROVAL	DEVELOPMENT NO.	5804840
DESIGN	LRN 11/10/64	MODEL		8-26-64	DEV3563						
DETAIL	LRN 11/10/64	SCALE	NONE	9-22-64	161013						
CHECK	RN 11/10/64	DRAW	VHD 11/16/64	2-5-65	163307						
APPRO		CHECK		3-5-65	163524						
				3-29-65	163851 ID						

C