STANDARDS CODE 2-7045

5804841

CARD CODE 5804841

SHEET 4 OF 7

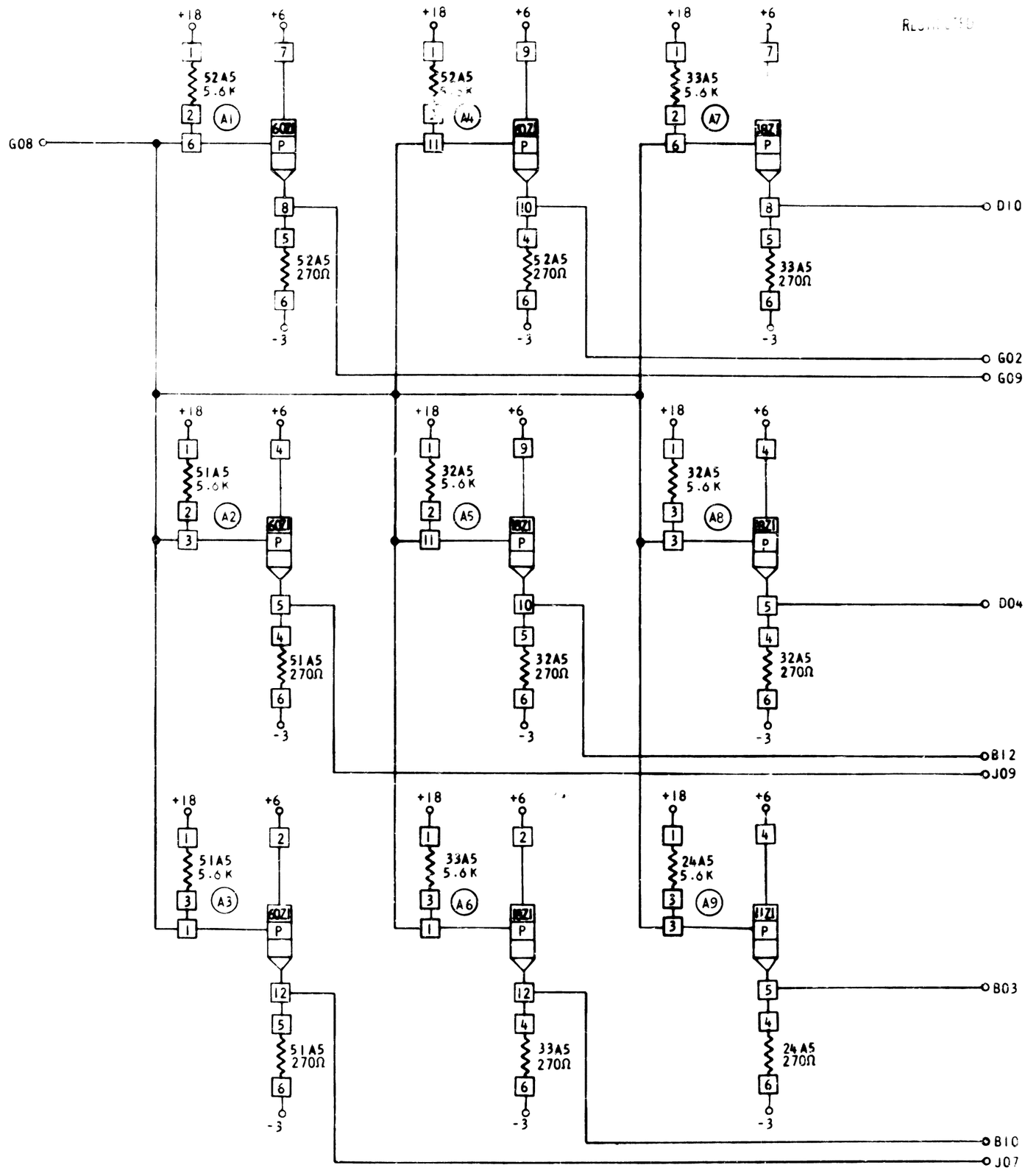

PINS B11-G11, D03-J03, B06-G06, D08-J08 ARE NOT BUSSED

CIRCUIT AND PACKAGING STANDARD

APPROVAL	DATE

INTERNATIONAL BUSINESS MACHINES CORP	DATE	CHANGE NO	APPROVAL	DATE	CHANGE NO	APPROVAL	DEVELOPMENT NO
NAME M2 FINAL AMPLIFIER B MODEL	7-29-64	DEV 3584		8DEC65	166939 E		
DESIGN LIG 7-24-64 MODEL	9-3-64	161015					
DETAIL LIG 7-24-64 SCALE NONE	3-16-65	163714 B					
CHECK WF 8-6-64 DRAW LIG 7-27-64	4-6-65	163896 C					
APPRO [illegible] CHECK WI 8-6-64	8NOV65	166938 C					

5804841

C