STANDARDS CODE 2-7045

5804841

CARD CODE 5804841

SHEET 7 OF 7

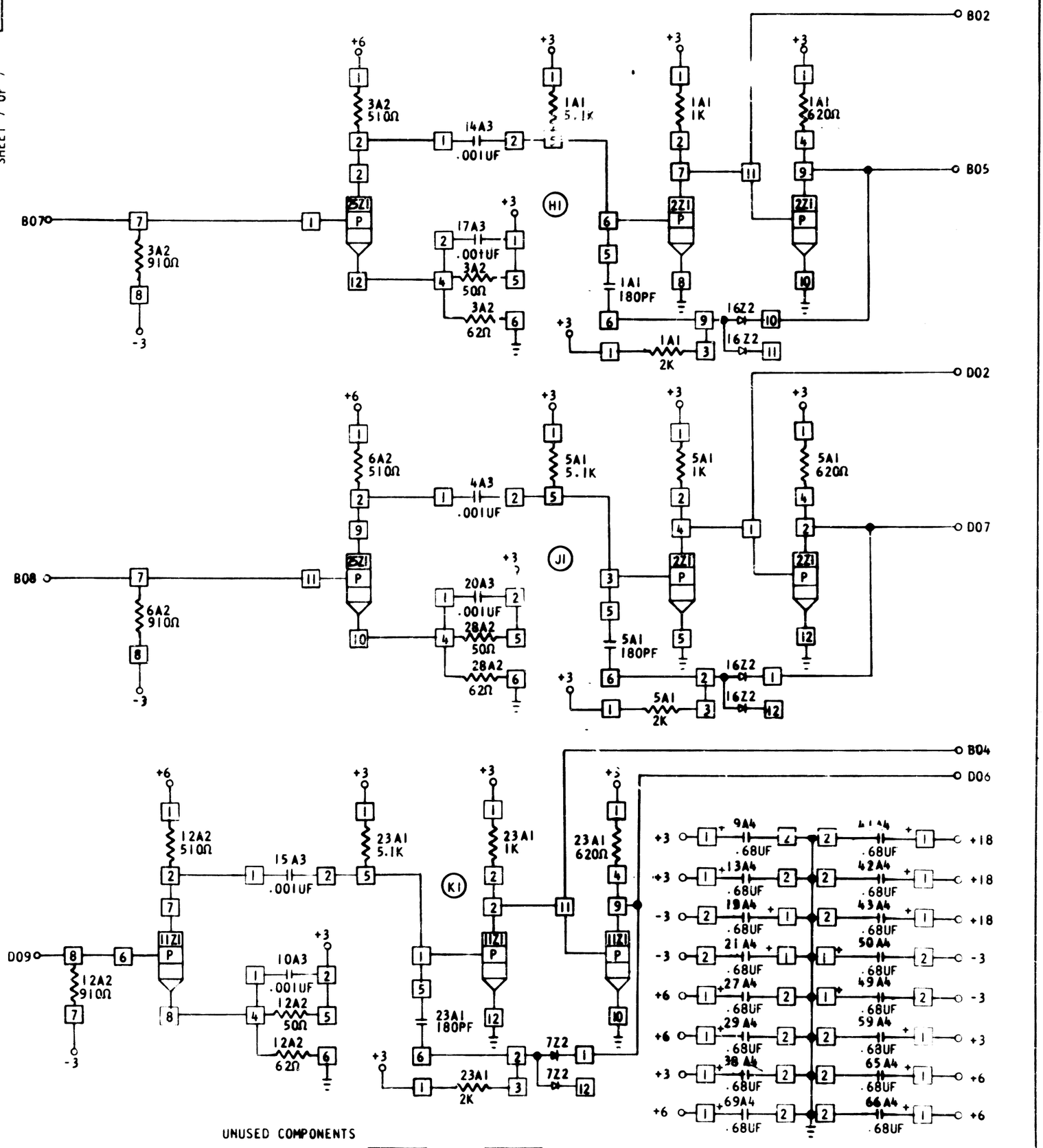

UNUSED COMPONENTS

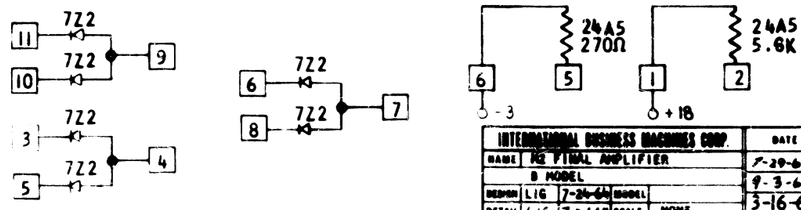

CIRCUIT AND PACKAGING STANDARD	
APPROVAL	DATE

INTERNATIONAL BUSINESS MACHINES CORP.	DATE	CHANGE NO.	APPROVAL	DATE	CHANGE NO	APPROVAL	DEVELOPMENT NO.
NAME HI FINAL AMPLIFIER	7-29-64	DEV 3584		8DEC65	166939 E		
B MODEL	9-3-64	1610'S					
DESIGN LIG 7-24-64 MODEL	3-16-65	163714 B					
DETAIL LIG 7-24-64 SCALE NONE	4-6-65	163896 C					
CHECK LIT 8-6-64 DRAW LIG 7-27-64	8NOV65	166938 D					
APPRO CHECK W 8-3-64							

5804841

C