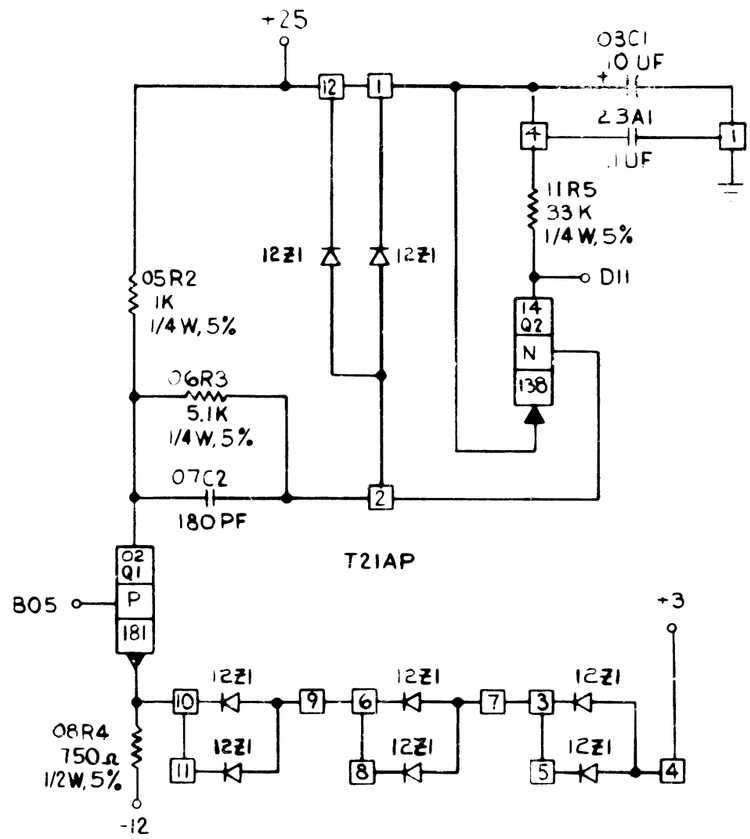

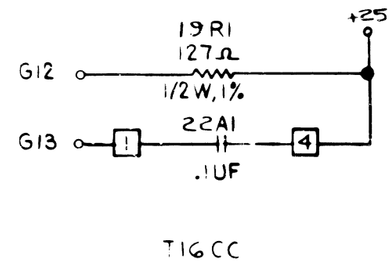

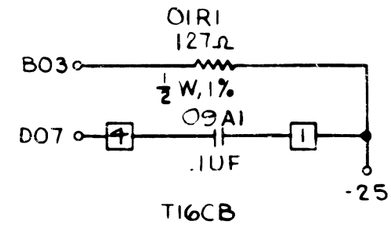

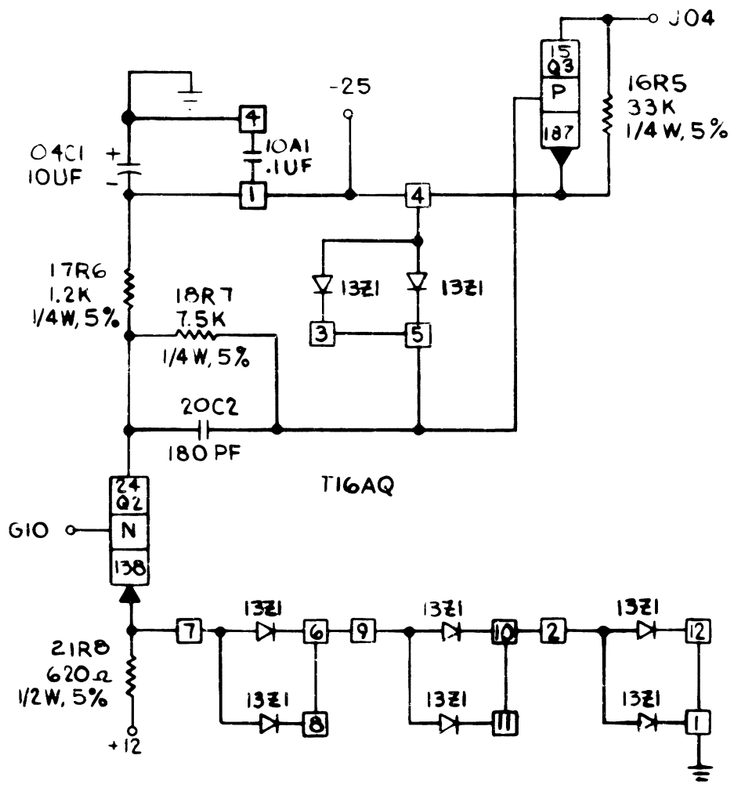

NOTE
J8 - D8 ARE BUSSED
J3 IS NOT BUSSED
G2 - B12 ARE NOT BUSSED

INTERNATIONAL BUSINESS MACHINES CORP.	DATE	CHANGE NO.	DATE	CHANGE NO.	NOTE	DEVELOPMENT NO.
MADE [illegible]	7-29-64	DEV 3904			X PRINT TO ENG. SPEC. NO.	
[illegible]	5-4-65	163102 A				
DESIGN [illegible] MODEL 2361A	70CT65	[illegible] B				5804844
DETAIL [illegible]						
CHECK [illegible] DRAW [illegible] 7-29-64						
APPRO [illegible] CHECK [illegible]						

5804844