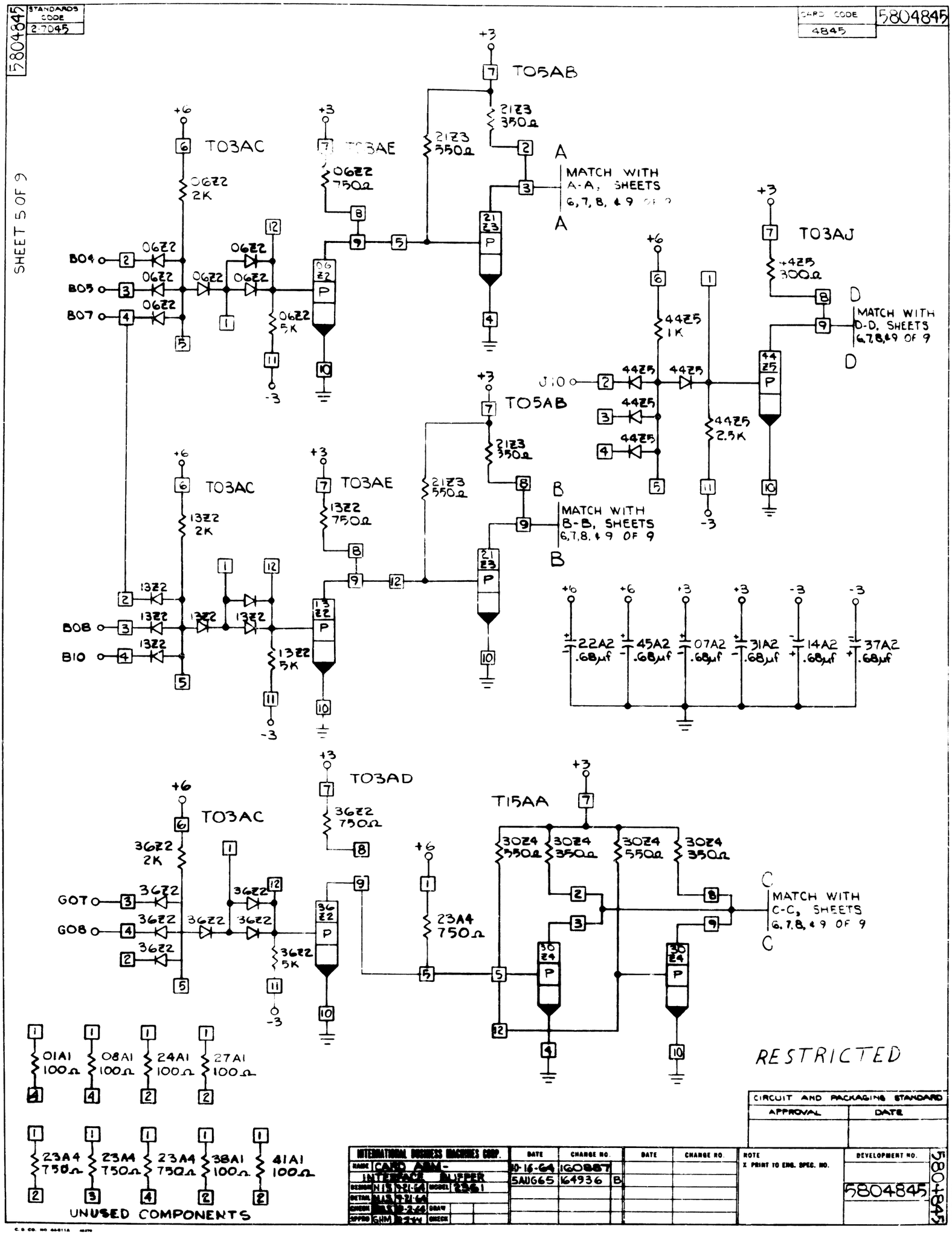
5804845
STANDARDS CODE 27045
CARD CODE 4845
SHEET 5 OF 9
T05AB
T03AC
T03AE
T03AJ
T03AD
T15AA
MATCH WITH A-A, SHEETS 6,7,8, & 9 OF 9
MATCH WITH D-D, SHEETS 6,7,8,&9 OF 9
MATCH WITH B-B, SHEETS 6,7,8, & 9 OF 9
MATCH WITH C-C, SHEETS 6,7,8, & 9 OF 9
B04
B05
B07
B08
B10
J10
G07
G08
RESTRICTED
UNUSED COMPONENTS
CIRCUIT AND PACKAGING STANDARD
APPROVAL
DATE
INTERNATIONAL BUSINESS MACHINES CORP.
CARD ARM - INTERACT BUFFER
MODEL 2561
DATE
CHANGE NO.
NOTE
X PRINT TO ENG. SPEC. NO.
DEVELOPMENT NO.
5804845