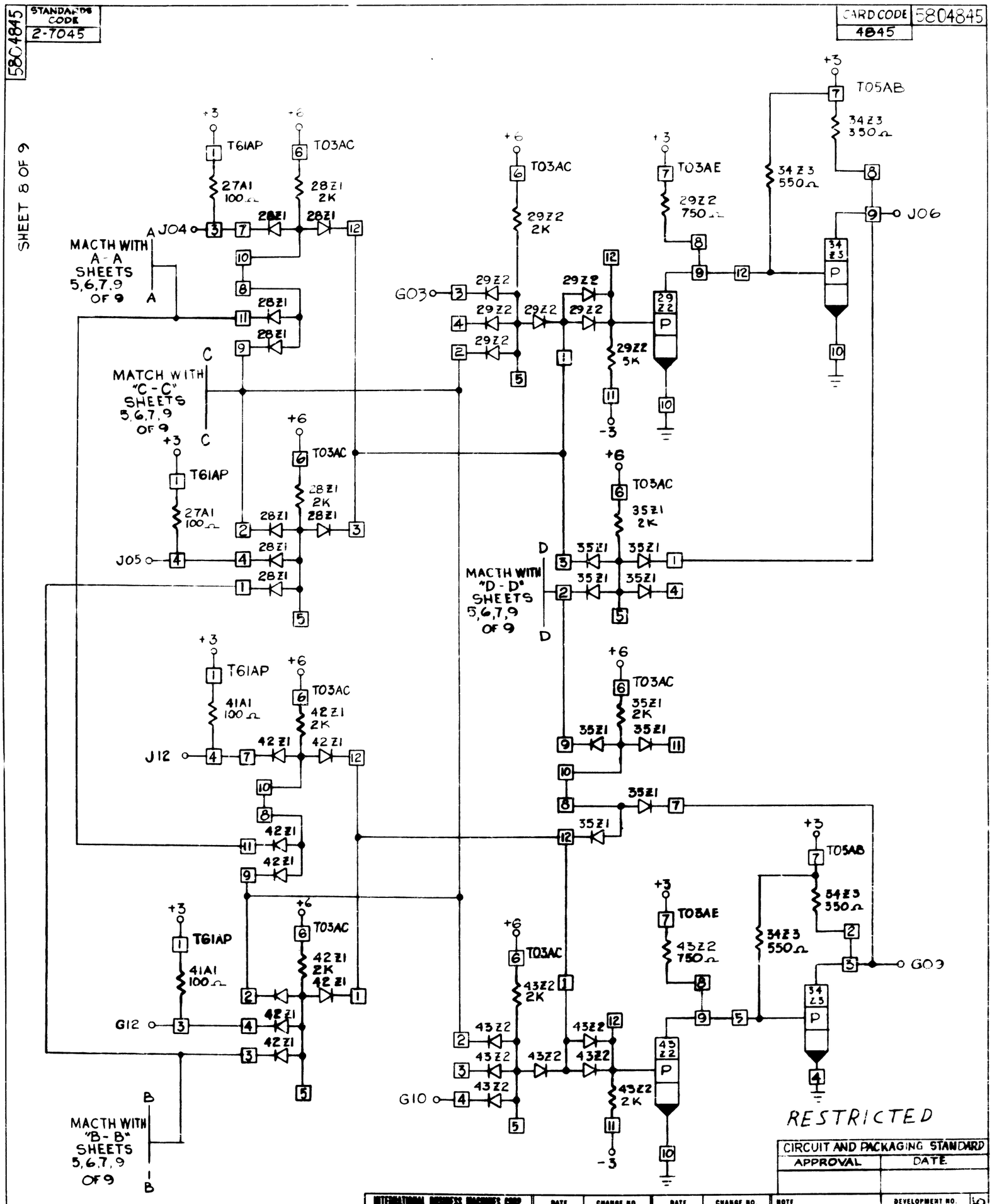
5804845
STANDARDS CODE
2-7045
CARD CODE 5804845
4845
SHEET 8 OF 9
T61AP
T03AC
T03AE
T05AB
27A1 100Ω
28Z1 2K
29Z2 2K
29Z2 750Ω
29Z2 5K
34Z3 550Ω
34Z3 350Ω
35Z1 2K
41A1 100Ω
42Z1 2K
43Z2 2K
43Z2 750Ω
J04
J05
J06
J12
G03
G12
G10
MACTH WITH A-A SHEETS 5,6,7,9 OF 9
MATCH WITH "C-C" SHEETS 5,6,7,9 OF 9
MACTH WITH "D-D" SHEETS 5,6,7,9 OF 9
MACTH WITH "B-B" SHEETS 5,6,7,9 OF 9
RESTRICTED
CIRCUIT AND PACKAGING STANDARD
APPROVAL
DATE
INTERNATIONAL BUSINESS MACHINES CORP.
NAME CARD ASM
INTERFACE BUFFER
MODEL 2361
DATE 10-16-64 CHANGE NO. 160887
5AUG65 164936 B
NOTE
X PRINT TO ENG. SPEC. NO.
DEVELOPMENT NO.
5804845