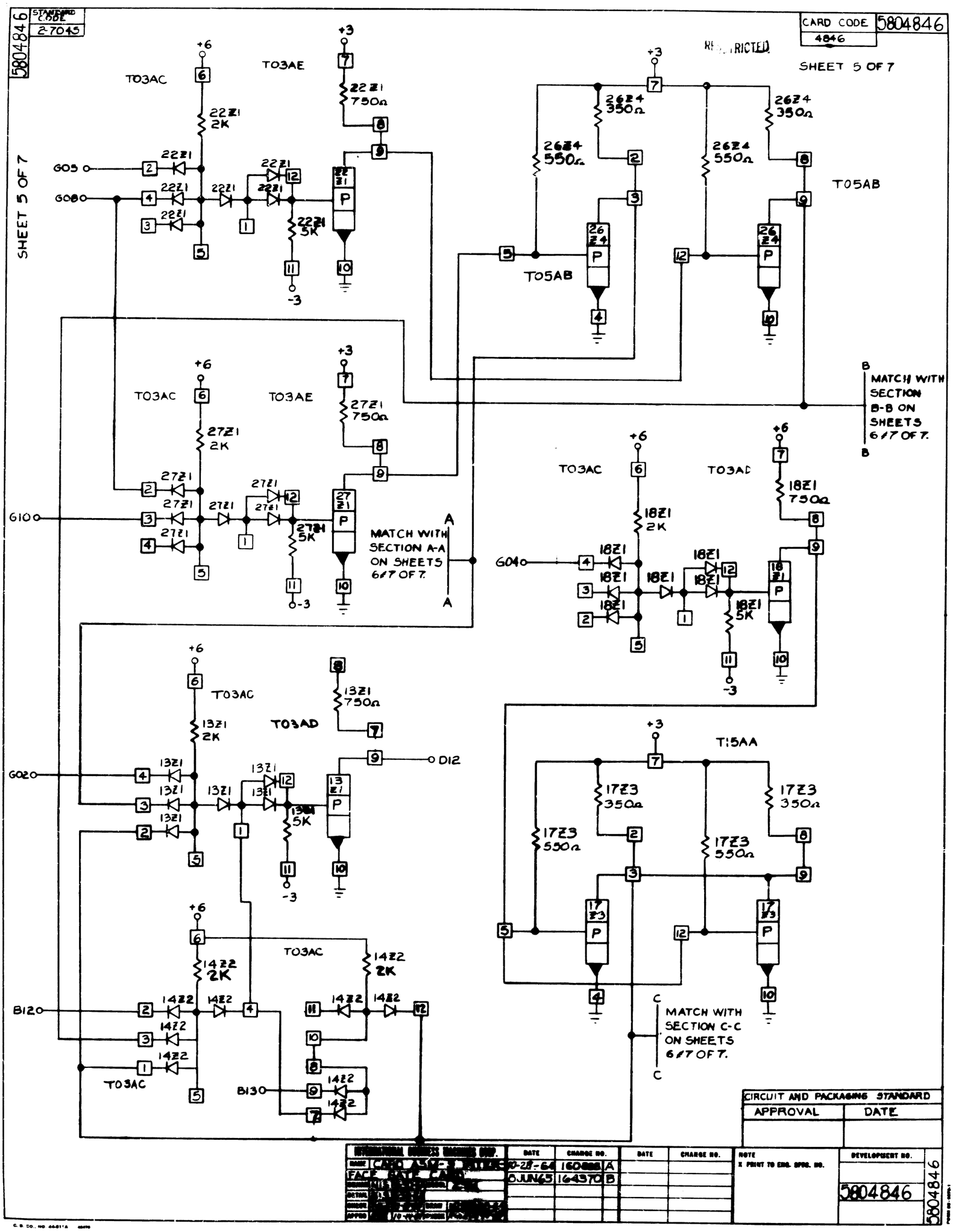
5804846
STANDARD CODE 2-7045
CARD CODE 5804846
4846
SHEET 5 OF 7
RESTRICTED
T03AC
T03AE
T05AB
T03AD
T15AA
+6
+3
-3
G05
G08
G10
G04
G02
B12
B13
D12
22Z1 2K
22Z1 750Ω
22Z1 5K
26Z4 350Ω
26Z4 550Ω
27Z1 2K
27Z1 750Ω
27Z1 5K
18Z1 2K
18Z1 750Ω
18Z1 5K
13Z1 2K
13Z1 750Ω
13Z1 5K
14Z2 2K
17Z3 350Ω
17Z3 550Ω
MATCH WITH SECTION A-A ON SHEETS 6 & 7 OF 7.
MATCH WITH SECTION B-B ON SHEETS 6 & 7 OF 7.
MATCH WITH SECTION C-C ON SHEETS 6 & 7 OF 7.
CIRCUIT AND PACKAGING STANDARD
APPROVAL
DATE
DATE
CHANGE NO.
10-28-64
160888
A
6JUN65
164370
B
NOTE
X PRINT TO ENG. SPEC. NO.
DEVELOPMENT NO.
5804846