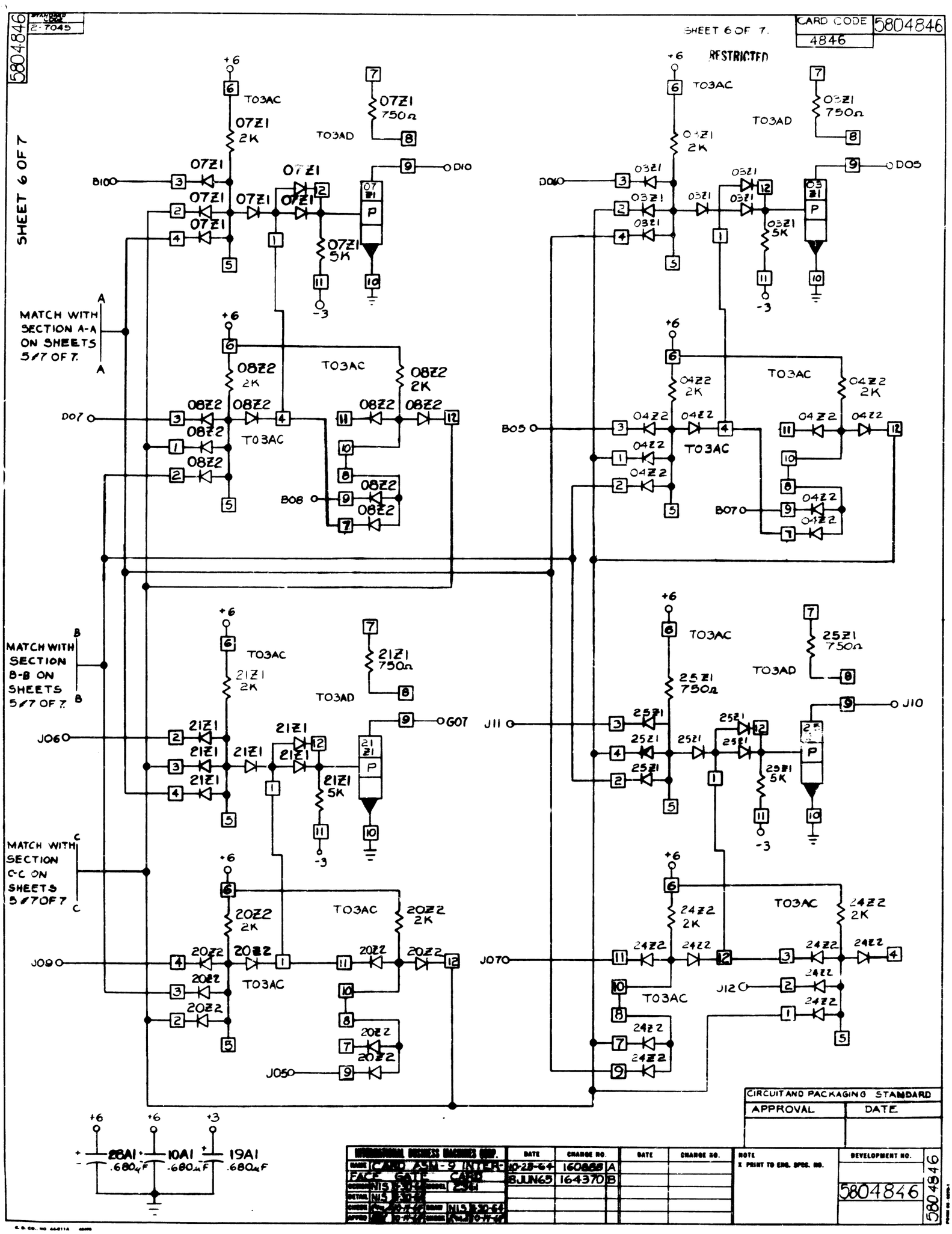
5804846
SHEET 6 OF 7
CARD CODE 4846
RESTRICTED
TO3AC
TO3AD
07Z1 2K
07Z1 750Ω
07Z1 5K
03Z1 2K
03Z1 750Ω
03Z1 5K
08Z2 2K
04Z2 2K
21Z1 2K
21Z1 750Ω
21Z1 5K
25Z1 750Ω
25Z1 5K
20Z2 2K
24Z2 2K
B10
D10
D06
D05
D07
B08
B05
B07
G07
J11
J10
J06
J09
J07
J12
J05
MATCH WITH SECTION A-A ON SHEETS 5 & 7 OF 7.
MATCH WITH SECTION B-B ON SHEETS 5 & 7 OF 7.
MATCH WITH SECTION C-C ON SHEETS 5 & 7 OF 7
+6
+3
-3
28A1 .680μF
10A1 .680μF
19A1 .680μF
CIRCUIT AND PACKAGING STANDARD
APPROVAL
DATE
CARD ASM-9 INTER-FACE GATE CARD
DATE
CHANGE NO.
160888 A
164370 B
NOTE
X PRINT TO ENG. SPEC. NO.
DEVELOPMENT NO.
5804846