STANDARDS CODE	CARD CODE	5804853
	4853	

SHEET 7 OF 7

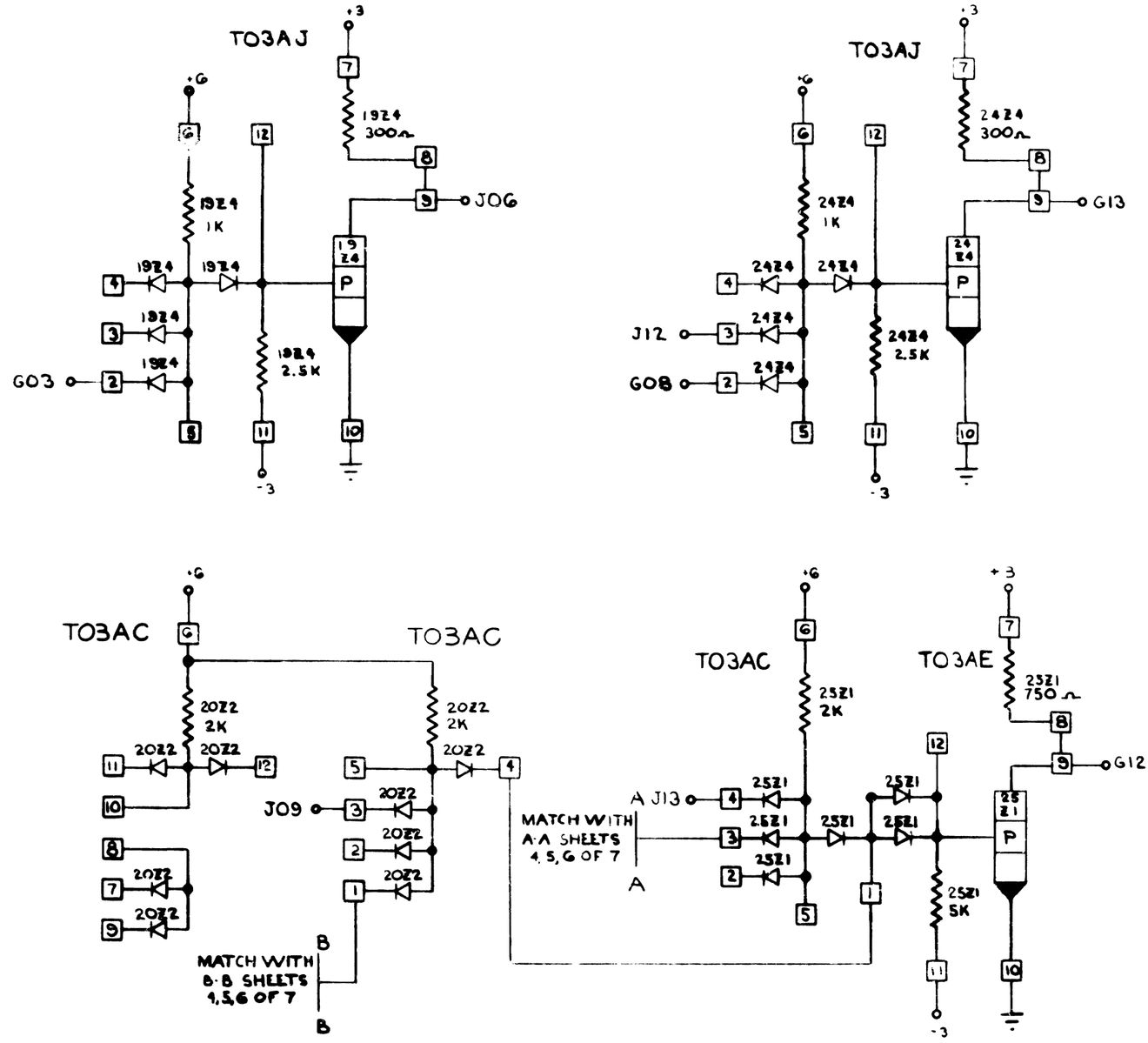

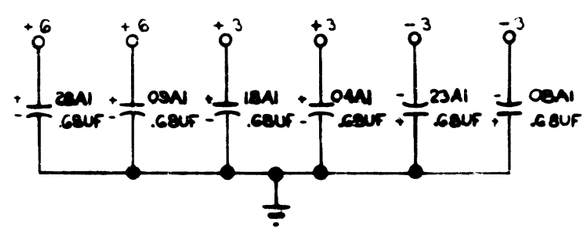

CIRCUIT AND PACKAGING STANDARD	
APPROVAL	DATE
GHM	3-15-65

	DATE	CHANGE NO.	APPROVAL	DATE	CHANGE NO.	APPROVAL	DEVELOPMENT NO.
NAME 11-2 WAY AOI'S	10-20-64	16					
	4-6-65	163237 B					5804853
	22 MAR 65	164360 C					

C