STANDARDS CODE
2-T045

CARD CODE	5804856
4856	

SHEET 4 OF 9

RESTRICTED

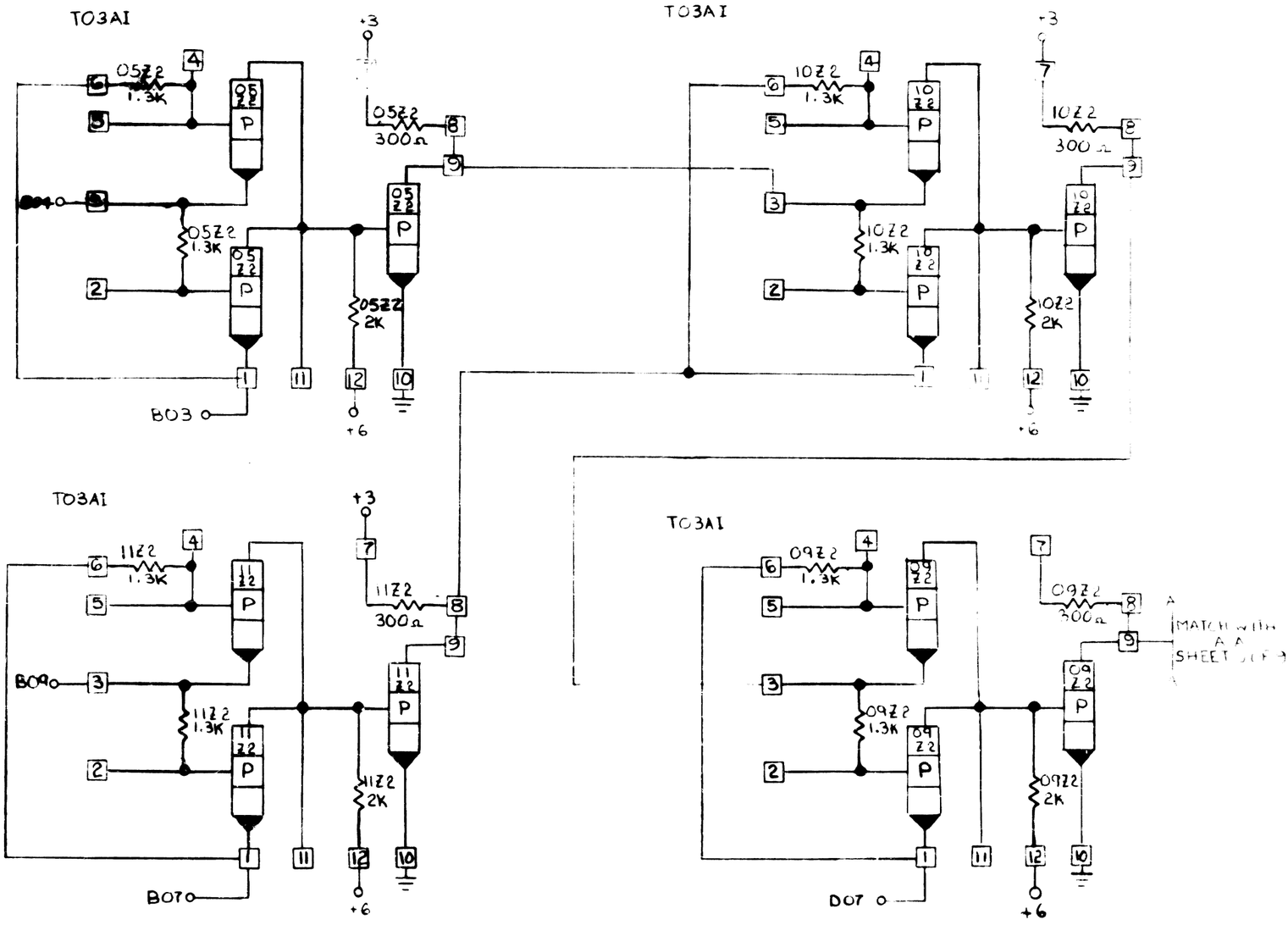

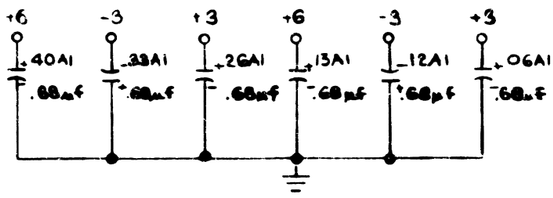

CIRCUIT AND PACKAGING STANDARD	
APPROVAL	DATE
R.C. Bradley	10-22-64

INTERNATIONAL BUSINESS MACHINES CORP.	DATE	CHANGE NO.	APPROVAL	DATE	CHANGE NO.	APPROVAL	DEVELOPMENT NO.
BASE CAMDASH - SAR TEST	11-5-64	161906					
COUNTER & CONTROL BAY							5804856
8361							

C

5804856