STANDARDS CODE 2-7045

5804856

CARD CODE 5804856
4856

SHEET 5 OF 9

RESTRICTED

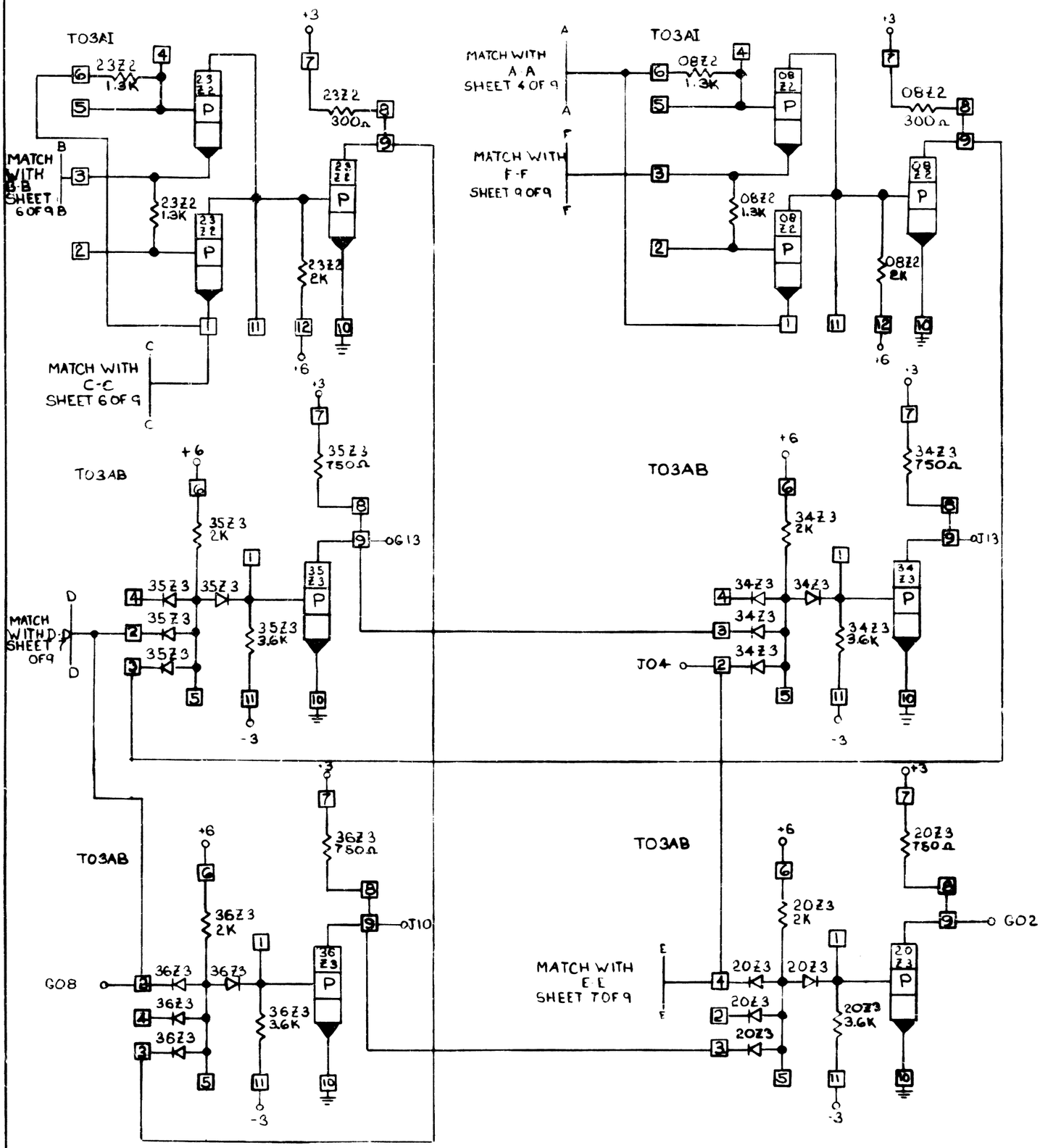

CIRCUIT AND PACKAGING STANDARD	
APPROVAL	DATE
R E Bradley	10-22-64

	DATE	CHANGE NO.	APPROVAL	DATE	CHANGE NO.	APPROVAL	DEVELOPMENT NO.
CONTROL DATA CORPORATION - STANFORD COMPUTER CONTROL AND	11-5-64	161906					
2361							5804856

C

5804856