5804856

STANDARDS CODE 2.7045

CARD CODE 5804856
4856
SHEET 6 OF 9

RESTRICTED

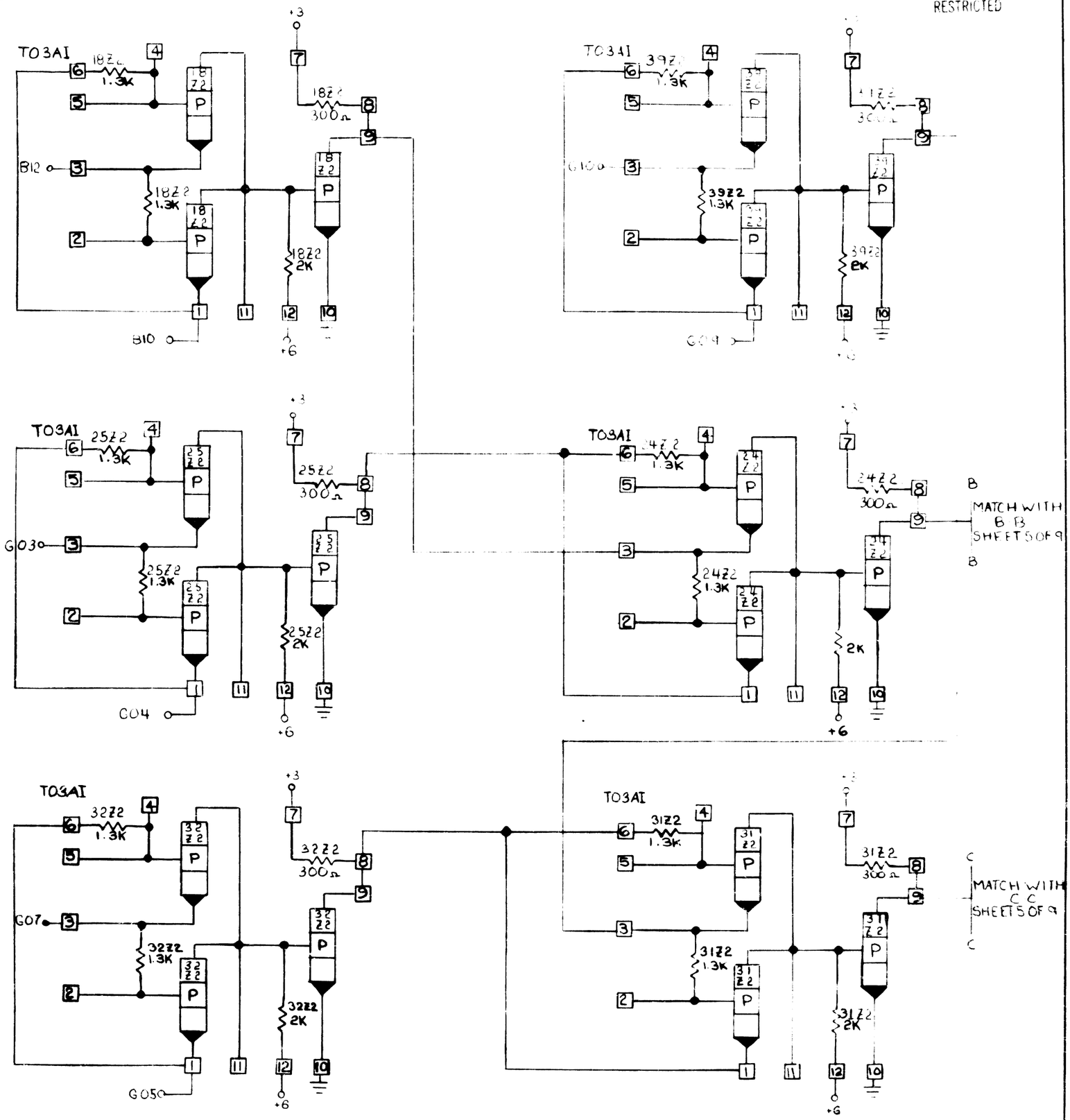

CIRCUIT AND PACKAGING STANDARD	
APPROVAL	DATE
R E Bradley	10-22-64

	DATE	CHANGE NO.	APPROVAL	DATE	CHANGE NO.	APPROVAL	DEVELOPMENT NO.
INTERNATIONAL BUSINESS MACHINES CORP.	11-5-64	161906					
COMPUTER CONTROL ASM							5804856
2361							

5804856

C