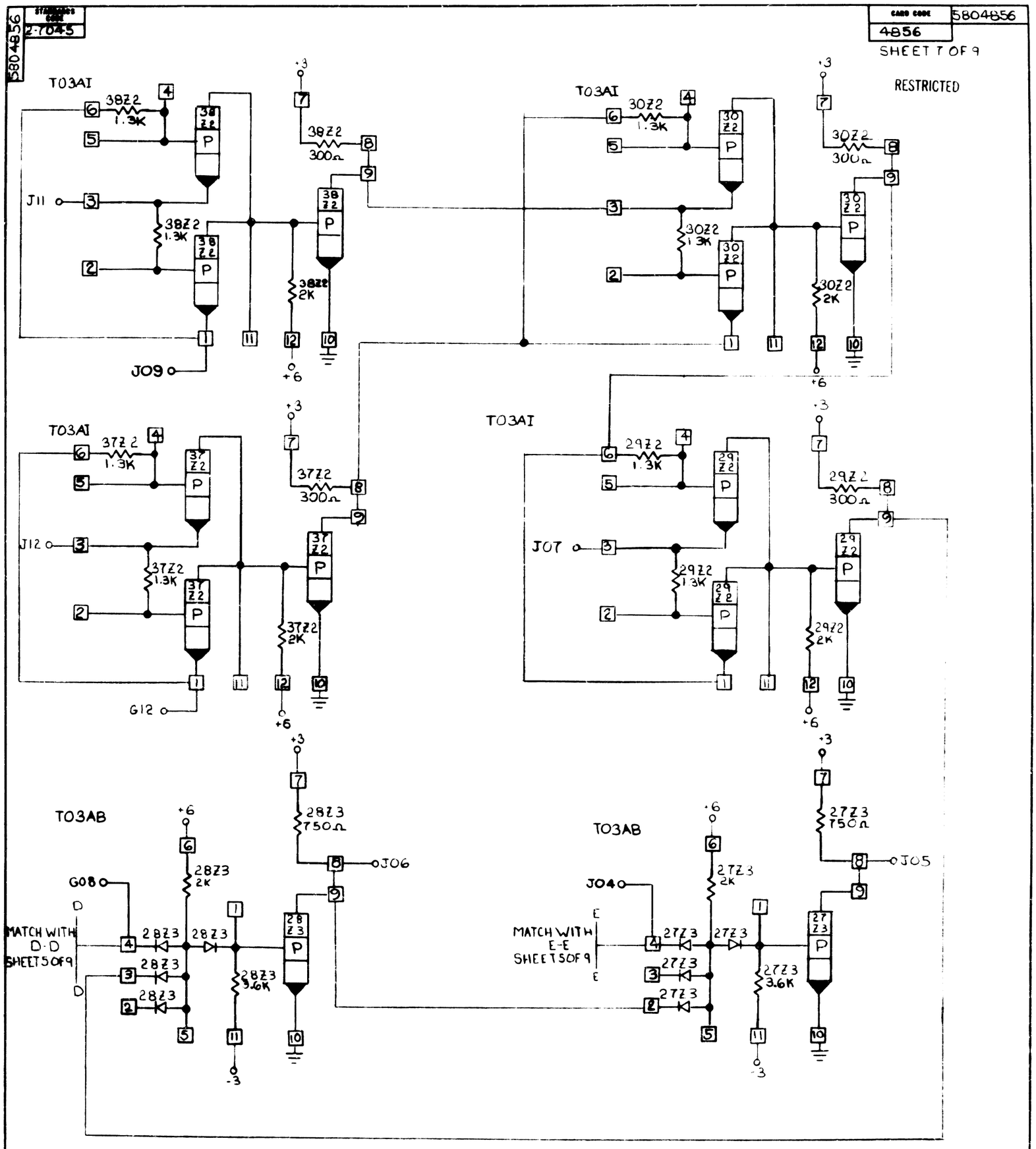

CIRCUIT AND PACKAGING STANDARDS	
APPROVAL	DATE
R C Bradley	10-22-64

	DATE	CHANGE NO.	APPROVAL	DATE	CHANGE NO.	APPROVAL	DEVELOPMENT NO.
[redacted] CARD ADDRESS TEST COMPUTER CONTROLA[redacted] 2361	11-5-64	161906					5804856

C

5804856