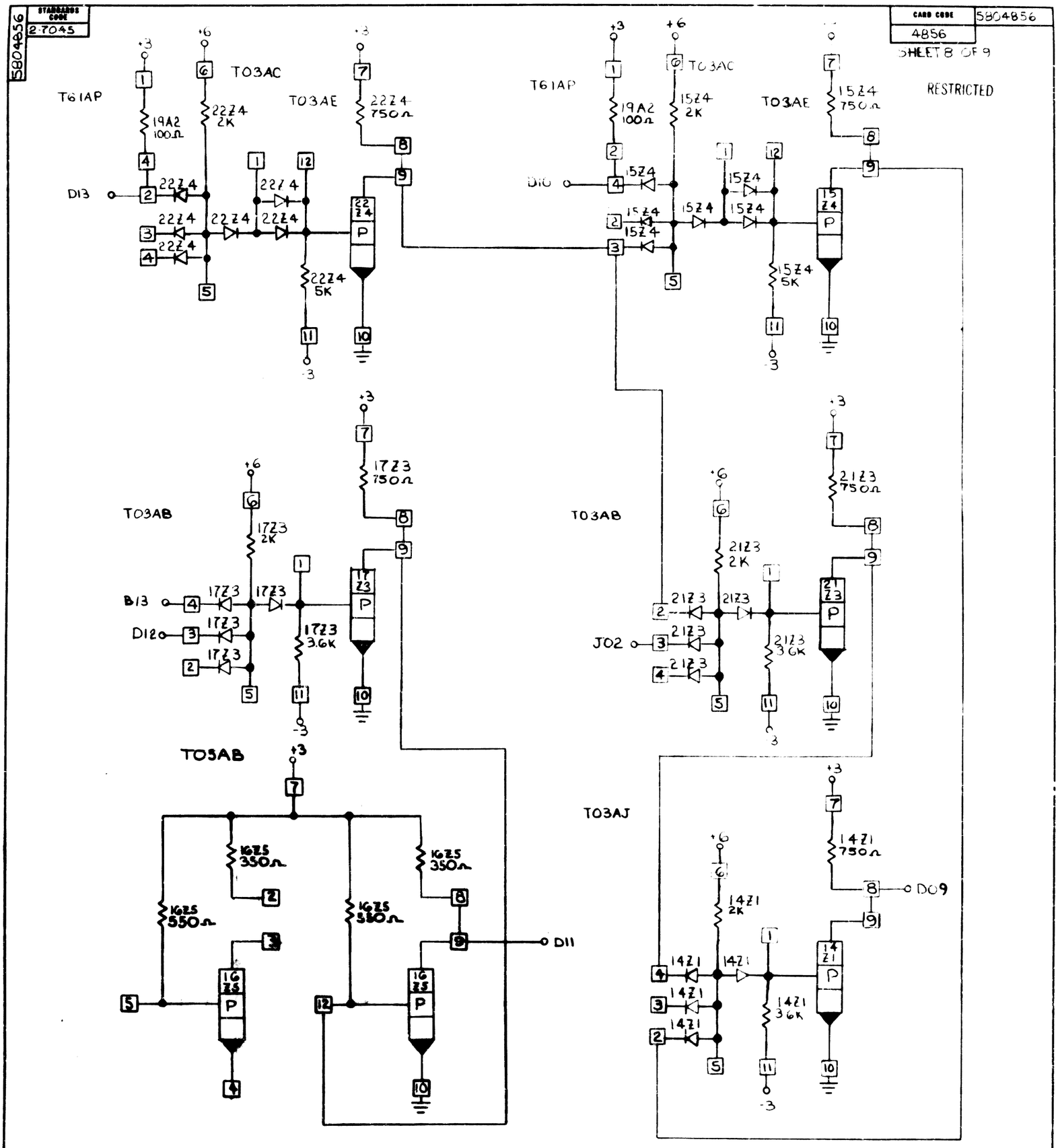

CIRCUIT AND PACKAGING STANDARD	
APPROVAL	DATE
R.E. Bradley	10-22-64

	DATE	CHANGE NO.	APPROVAL	DATE	CHANGE NO.	APPROVAL	DEVELOPMENT NO.
CARD CODE 2361 COUNTER & CONTROL ASM	11-5-64	161906					5804856

C