STANDARDS CODE	CARD CODE	5804856
2-7045	4856	

5304856

SHEET 9 OF 9

RESTRICTED

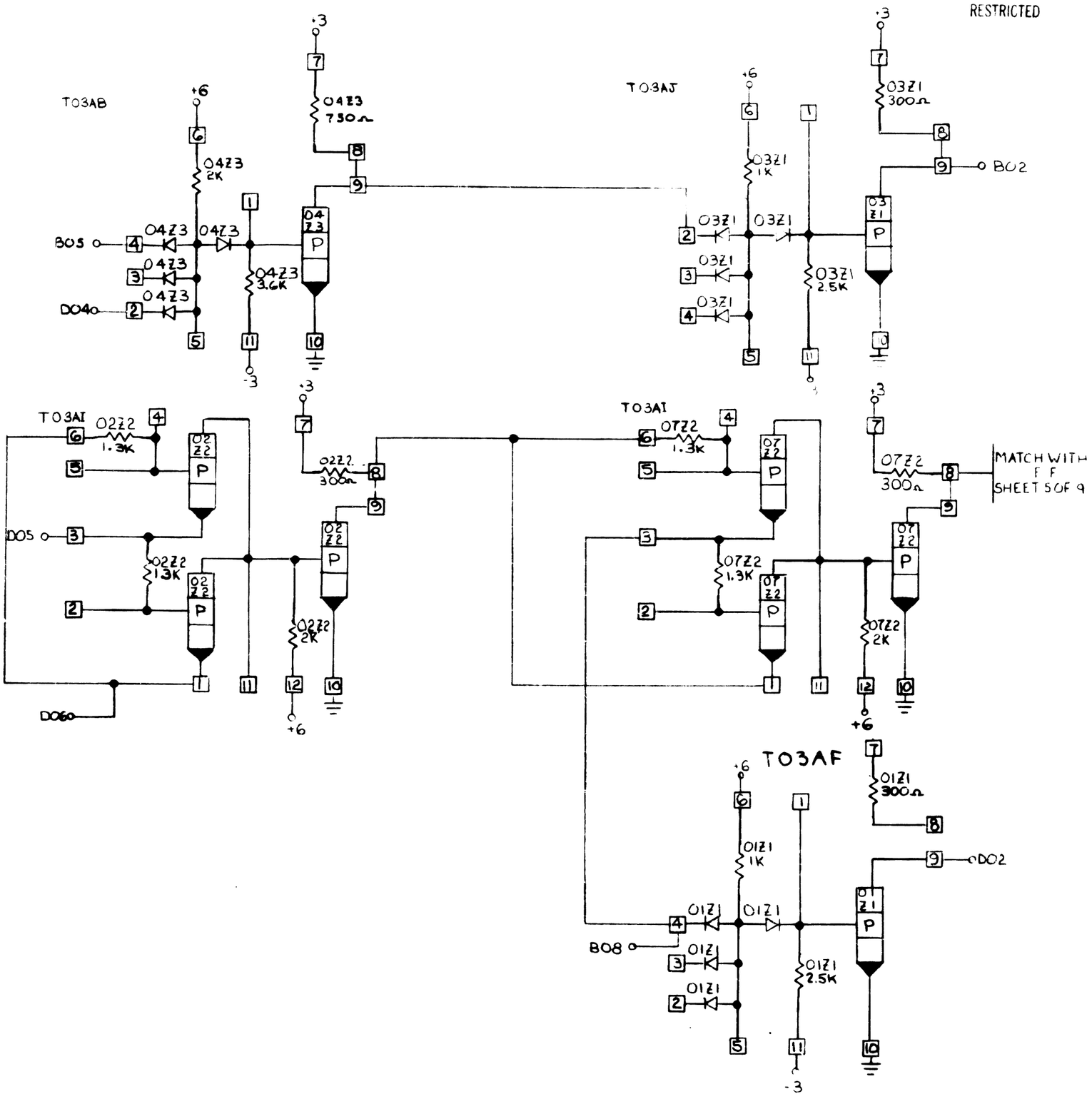

CIRCUIT AND PACKAGING STANDARD	
APPROVAL	DATE
R E Bradley	10-22-64

INTERNATIONAL BUSINESS MACHINES CORP.	DATE	CHANGE NO.	APPROVAL	DATE	CHANGE NO.	APPROVAL	DEVELOPMENT NO.
NAME KANDASM - SAR TEST COUNTER & CONTROL ASM	11-5-64	161906					
DRAWN NJS 10-5-64 / 2361							5804856
DETAIL NJS 10-5-64							
CHECK KM 10-21-64							
APPRD							

C

5304856