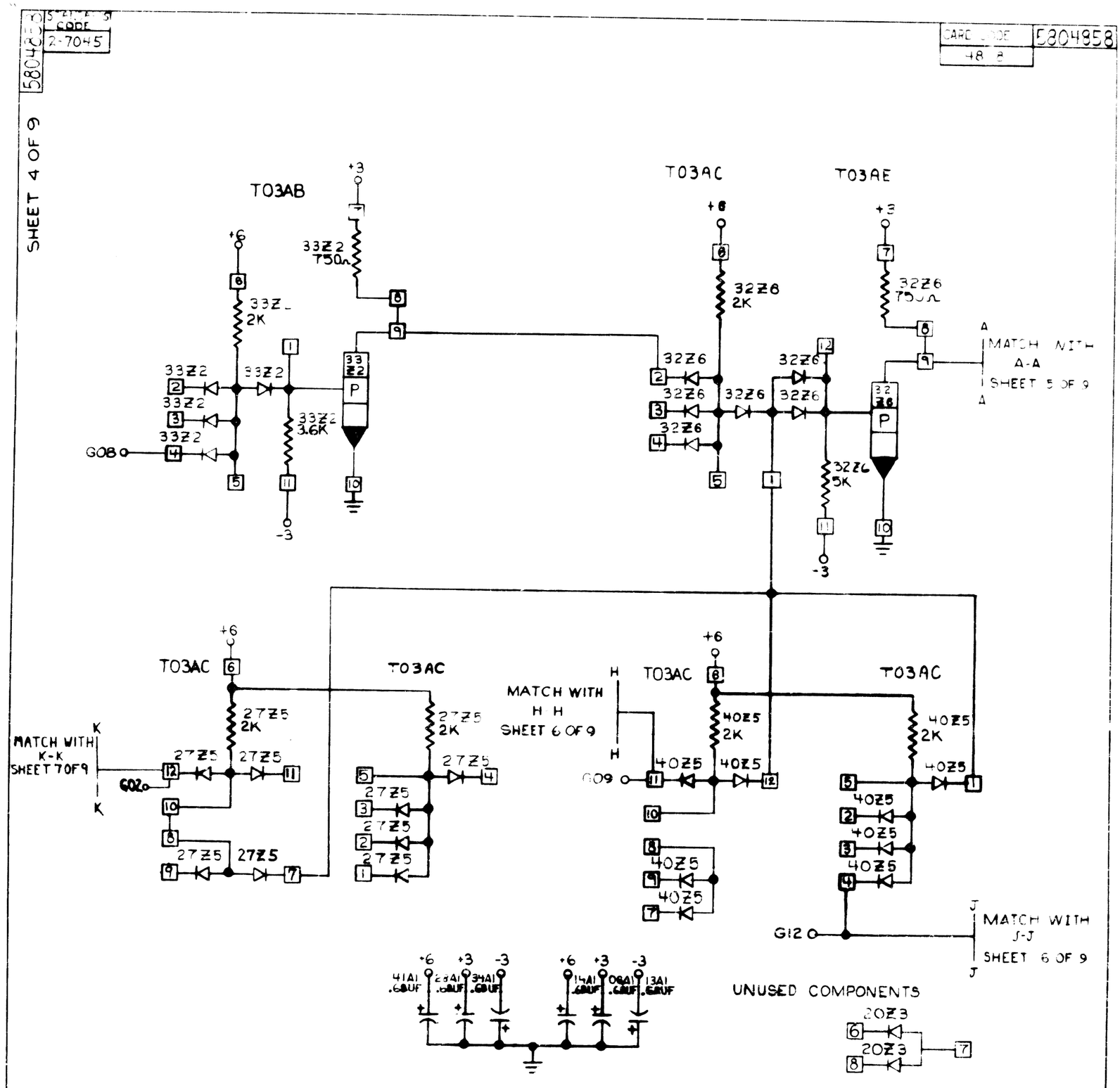

INTERNATIONAL BUSINESS MACHINES CORP.	DATE	CHANGE NO	DATE	CHANGE NO.
NAME CARD ASSY-CHECK BIT CORRECTION	11-05-64	161893 A		
DESIGN NJS 9-29-64 MODEL 2701	11 AUG 65	164959 B		
DETAIL NJS 9-29-64				
CHECK RRS 10-21-64 DRAWN NJS 9-29-64				
APPRO 10-21-64 CHECK RRS 10-21-64				

CIRCUIT AND PACKAGING STANDARD

APPROVAL	DATE
R E Bradley	10-22-64

NOTE
A PRINT TO ENG. SPEC. NO.

DEVELOPMENT NO.

5804858

5804858