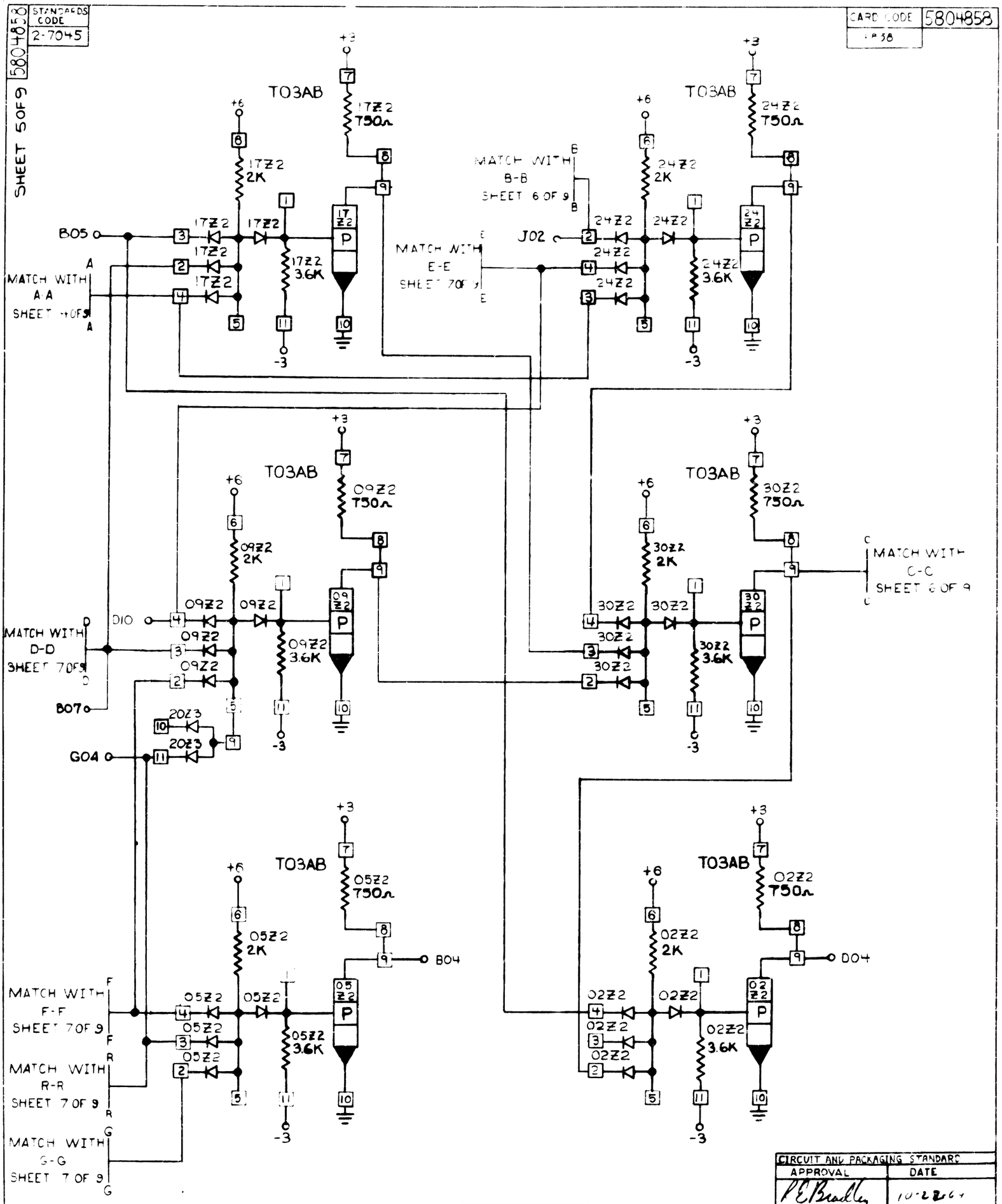
STANDARDS CODE 2-7045
5804858
SHEET 5 OF 9
CARD CODE 5804858
T03AB
+3
+6
-3
17Z2 750Ω
17Z2 2K
17Z2 3.6K
24Z2 750Ω
24Z2 2K
24Z2 3.6K
09Z2 750Ω
09Z2 2K
09Z2 3.6K
30Z2 750Ω
30Z2 2K
30Z2 3.6K
05Z2 750Ω
05Z2 2K
05Z2 3.6K
02Z2 750Ω
02Z2 2K
02Z2 3.6K
20Z3
B05
MATCH WITH A-A SHEET 4 OF 9
MATCH WITH B-B SHEET 6 OF 9
MATCH WITH E-E SHEET 7 OF 9
J02
D10
MATCH WITH D-D SHEET 7 OF 9
B07
G04
MATCH WITH C-C SHEET 8 OF 9
B04
D04
MATCH WITH F-F SHEET 7 OF 9
MATCH WITH R-R SHEET 7 OF 9
MATCH WITH G-G SHEET 7 OF 9
CIRCUIT AND PACKAGING STANDARD
APPROVAL
DATE
10-22-64
INTERNATIONAL BUSINESS MACHINES CORP.
NAME CARD ASM - CHECK
BCT CORRECTION
DESIGN NLS 9-29-64
MODEL 2961
DETAIL NLS 9-29-64
CHECK RES 10-21-64
DRAW NLS 9-29-64
APPRO RES 10-21-64
DATE
CHANGE NO.
11-05-64 161893 A
11 AUG 65 164959 B
NOTE
X PRINT TO ENG. SPEC. NO.
DEVELOPMENT NO.
5804858