STANDARDS CODE 2-7045

CARD CODE 5804858

SHEET 6 OF 9

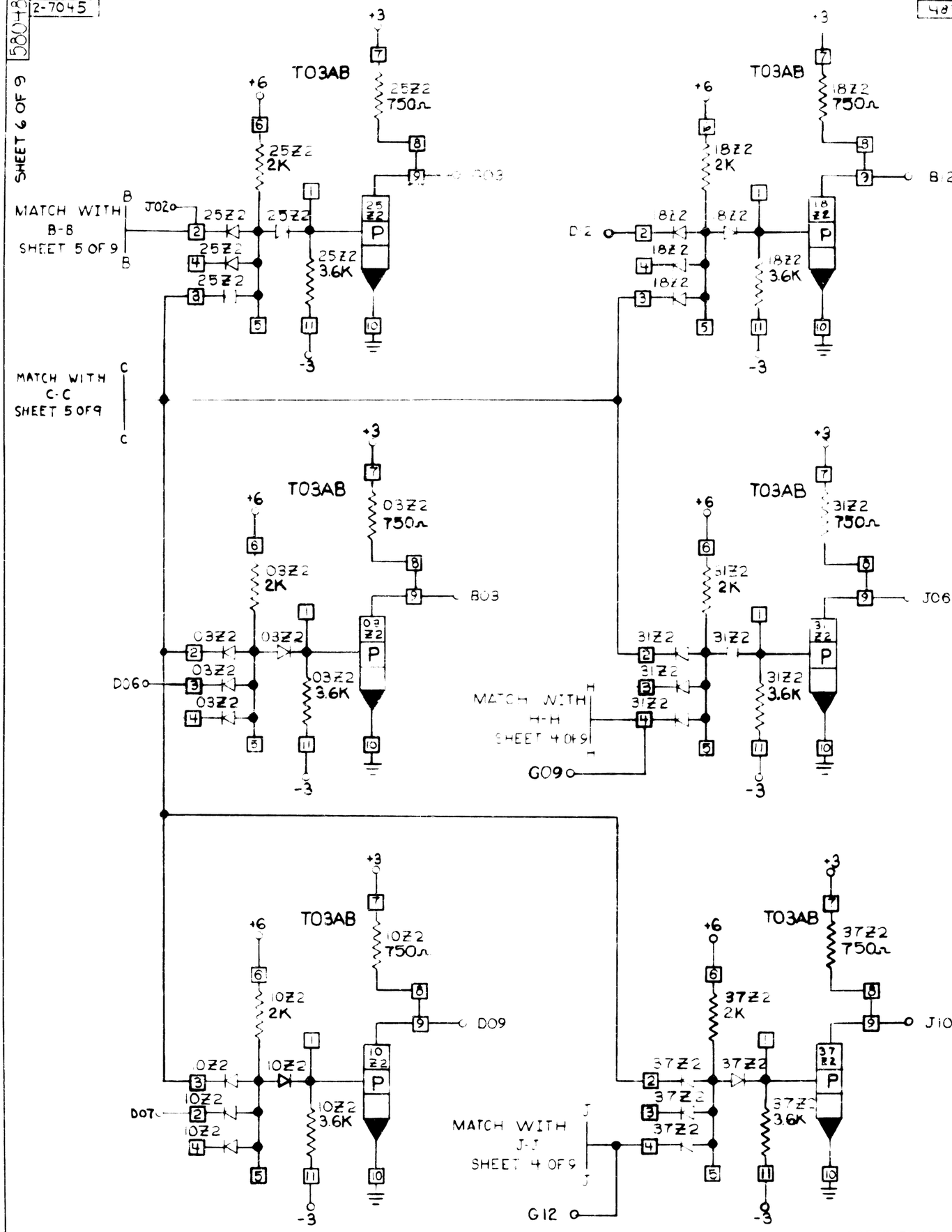

CIRCUIT AND PACKAGING STANDARD

APPROVAL	DATE
R E Bradley	10-22-64

INTERNATIONAL BUSINESS MACHINES CORP.		DATE	CHANGE NO.		DATE	CHANGE NO
NAME	CARD ASM-CHECK BIT CORRECTION	11-05-64	161893	A		
DR. SIGN	NJS 10-21-64 MODEL 2361	11 AUG 65	164959	B		
DETAIL	NJS 10-22-64					
CHECK	RZS 10-21-64 DRAW NJS 9-29-64					
APPRD	10-21-64 CHECK RZS 10-21-64					

NOTE
X PRINT TO ENG. SPEC. NO.

DEVELOPMENT NO

5804858

580-4858