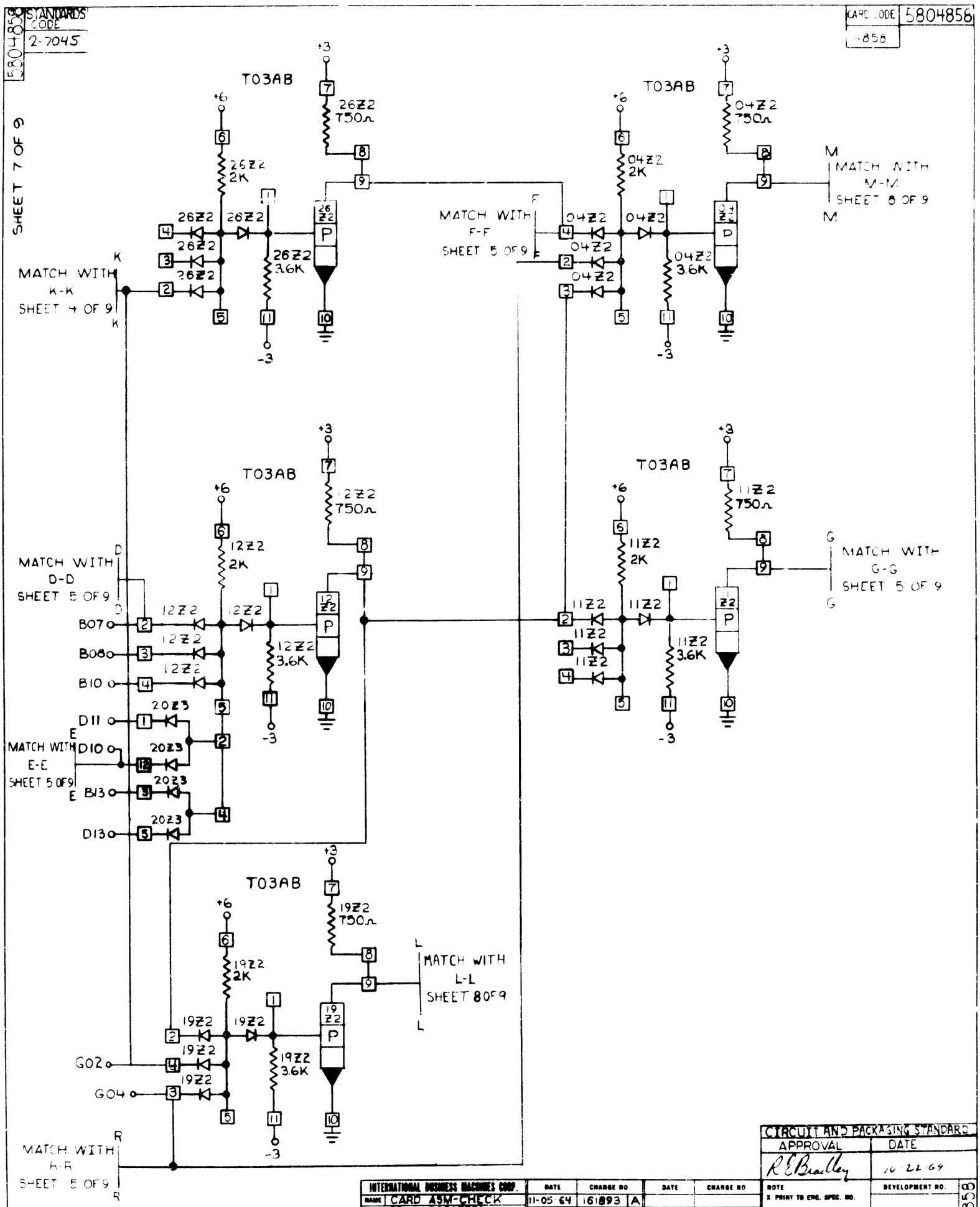

CIRCUIT AND PACKAGING STANDARDS	
APPROVAL	DATE
R E Bradley	10 22 64

INTERNATIONAL BUSINESS MACHINES CORP.							
NAME	CARD ASM-CHECK BIT CORRECTION						
DESIGN	NIS 9-29-64	MODEL	2361				
DETAIL	NIS 9-29-64						
CHECK	RES 10-21-64	DRAW	NIS 9-29-64				
APPRO	10-22-64	CHECK	RES 10-21-64				

DATE	CHANGE NO		DATE	CHANGE NO
11-05-64	161893	A		
11 AUG 65	164959	B		

NOTE
X PRINT TO ENG. SPEC. NO.

DEVELOPMENT NO.

5804858

5804858