STANDARDS CODE 2-7045

CARD CODE 5804858
4858

SHEET 9 OF 9

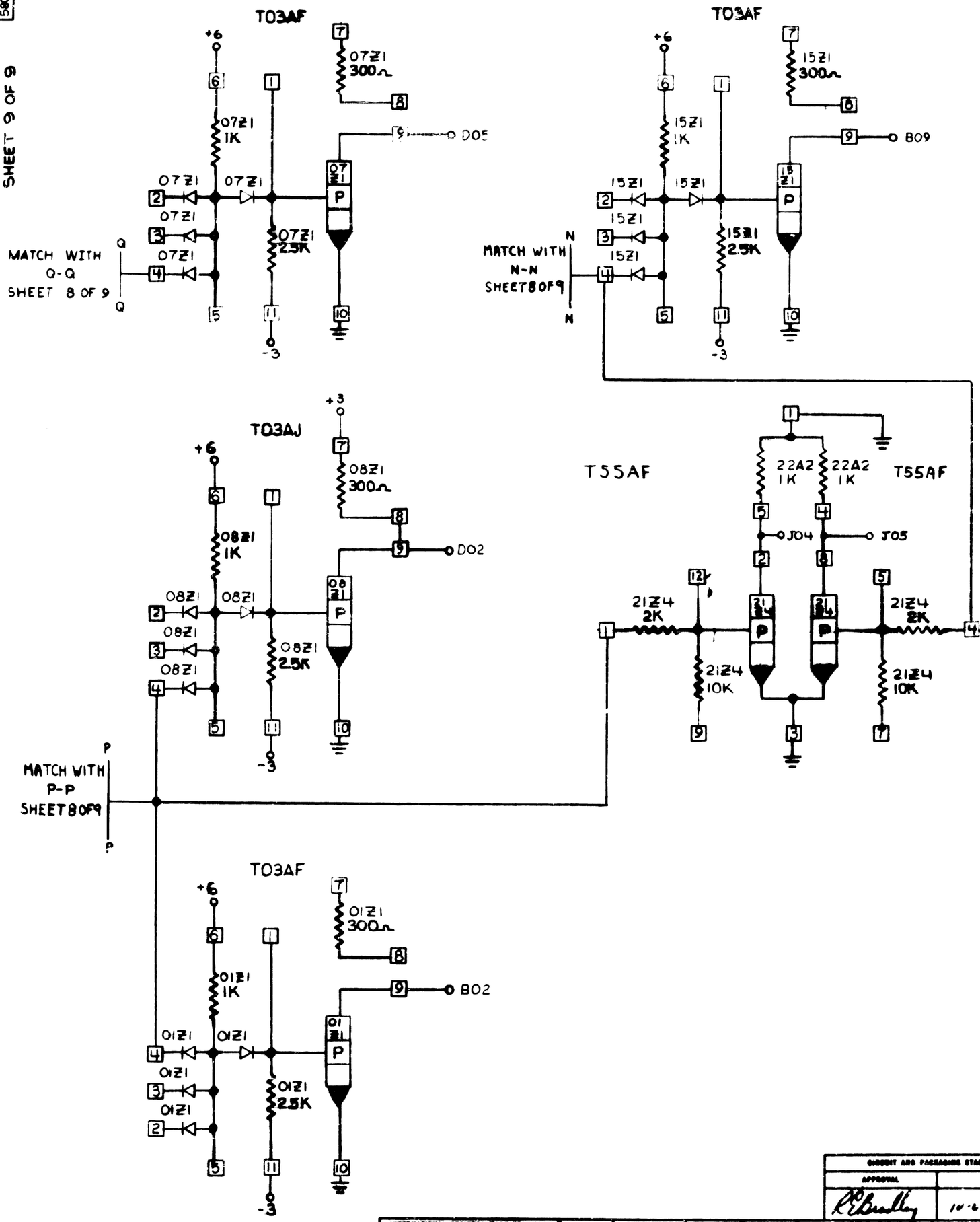

CIRCUIT AND PACKAGING STANDARD	
APPROVAL	DATE
R.C. Bradley	10-22-64

	DATE	CHANGE NO.	APPROVAL	DATE	CHANGE NO.	APPROVAL	DEVELOPMENT NO.
	10-05-64	161895 A					
		B					
							5804858

580-4858

C