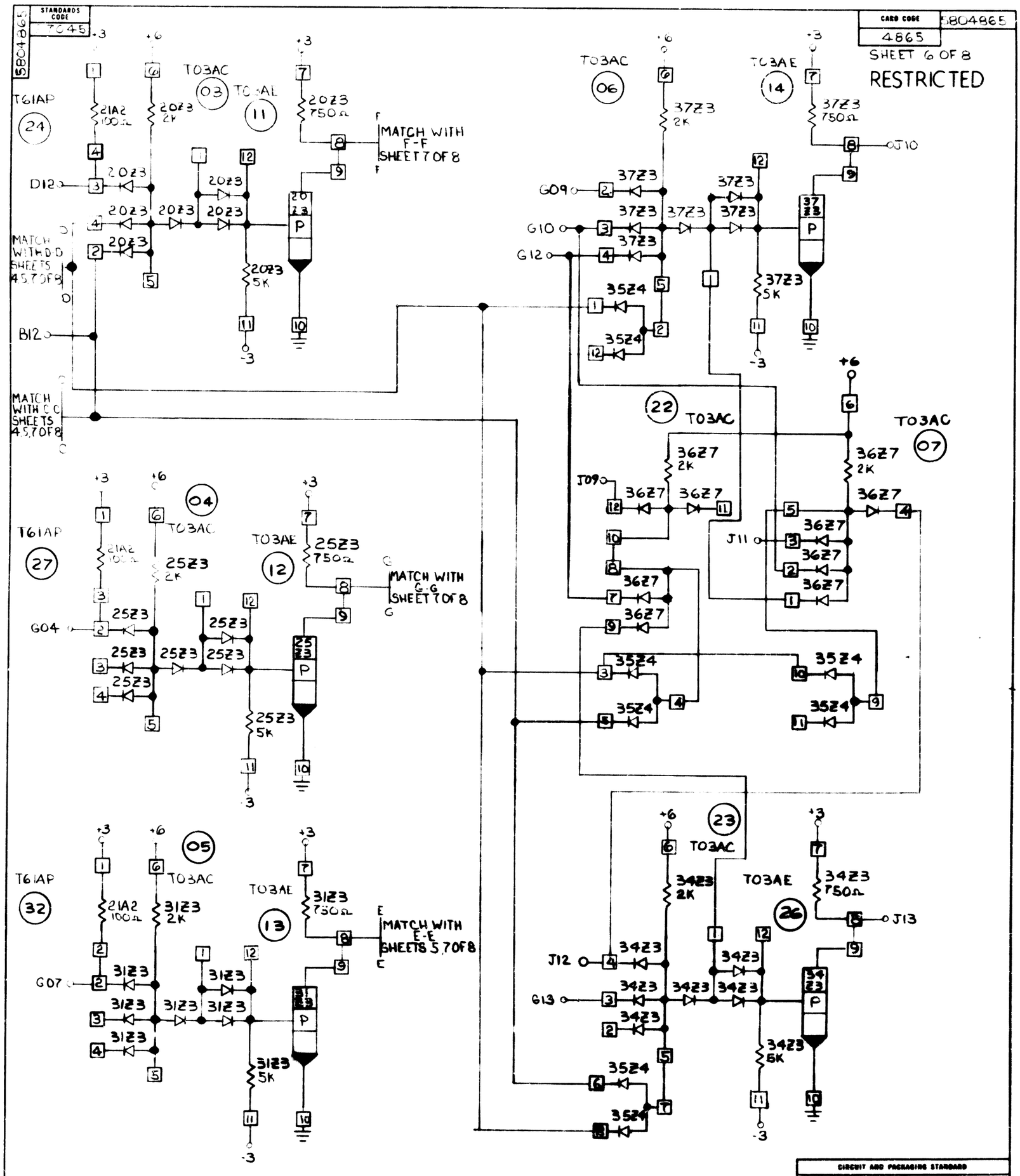
STANDARDS CODE
7C45
5B04865
CARD CODE
4865
5B04865
SHEET 6 OF 8
RESTRICTED
T61AP
24
T03AC
03
T03AE
11
MATCH WITH F-F SHEET 7 OF 8
MATCH WITH D D SHEETS 4,5,7 OF 8
MATCH WITH C C SHEETS 4,5,7 OF 8
T03AC
06
T03AE
14
J10
J09
J11
22
T03AC
07
T61AP
27
04
T03AC
T03AE
12
MATCH WITH G-G SHEET 7 OF 8
T61AP
32
05
T03AC
T03AE
13
MATCH WITH E-E SHEETS 5,7 OF 8
23
T03AC
T03AE
26
J12
J13
CIRCUIT AND PACKAGING STANDARD
APPROVAL
DATE
GHM
6-3-65
DATE
CHANGE NO.
APPROVAL
DEVELOPMENT NO.
11-6-64
161909
5B04865
C