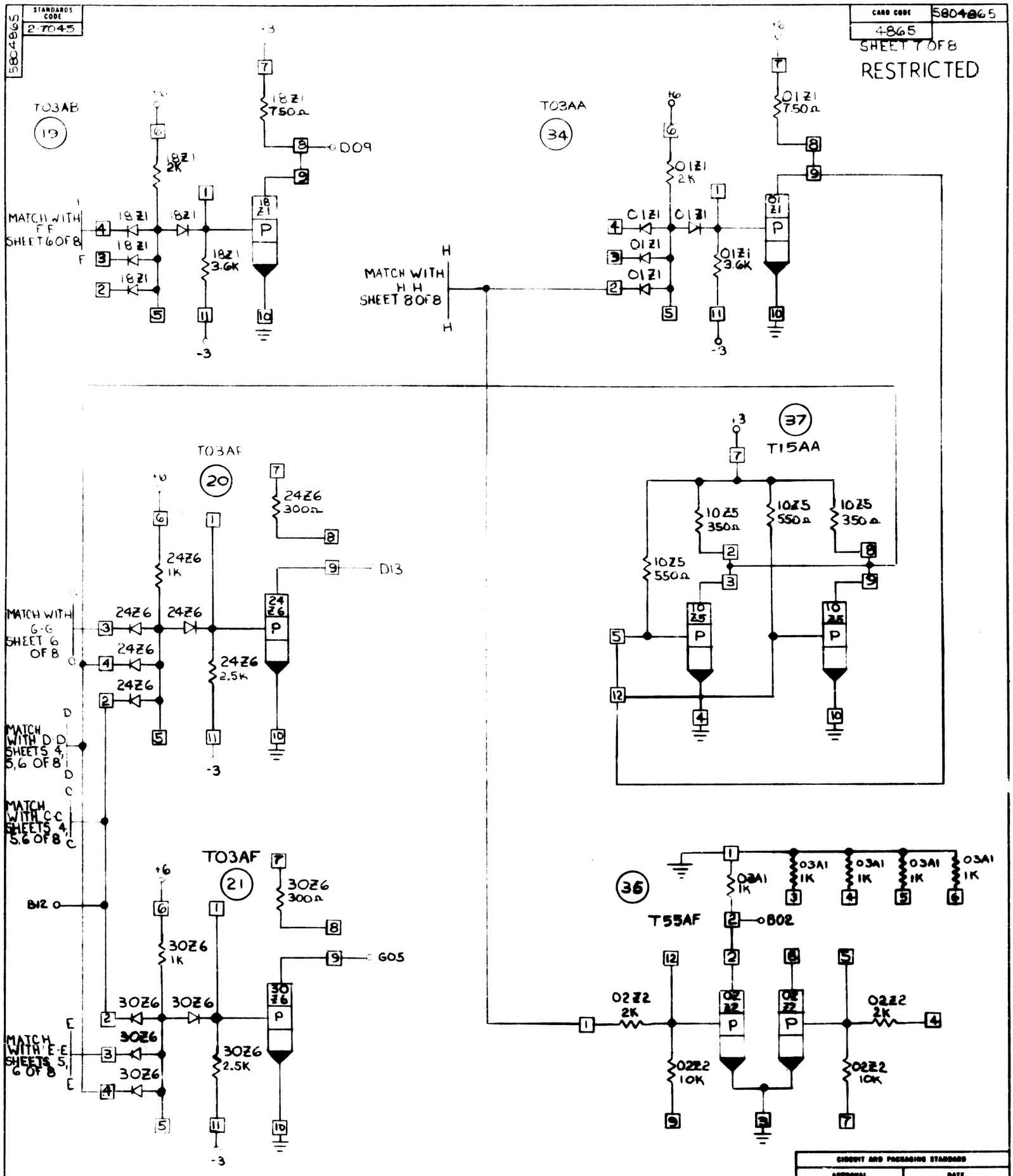
STANDARDS CODE
2-7045
5804865
CARD CODE
4865
5804865
SHEET 7 OF 8
RESTRICTED
T03AB
19
18Z1
750Ω
D09
18Z1
2K
MATCH WITH
F F
SHEET 6 OF 8
18Z1
3.6K
-3
T03AA
34
01Z1
750Ω
01Z1
2K
01Z1
3.6K
MATCH WITH
H H
SHEET 8 OF 8
T03AF
20
24Z6
300Ω
D13
24Z6
1K
MATCH WITH
G-G
SHEET 6
OF 8
24Z6
2.5K
MATCH WITH D D
SHEETS 4,
5,6 OF 8
MATCH
WITH C C
SHEETS 4,
5,6 OF 8
37
T15AA
10Z5
350Ω
10Z5
550Ω
10Z5
350Ω
10Z5
550Ω
T03AF
21
30Z6
300Ω
B12
G05
30Z6
1K
MATCH
WITH E E
SHEETS 5,
6 OF 8
30Z6
2.5K
36
T55AF
03A1
1K
B02
02Z2
2K
02Z2
10K
CIRCUIT AND PACKAGING STANDARD
APPROVAL
DATE
GHM
6-3-65
DATE
CHANGE NO.
APPROVAL
DEVELOPMENT NO.
5804865
C