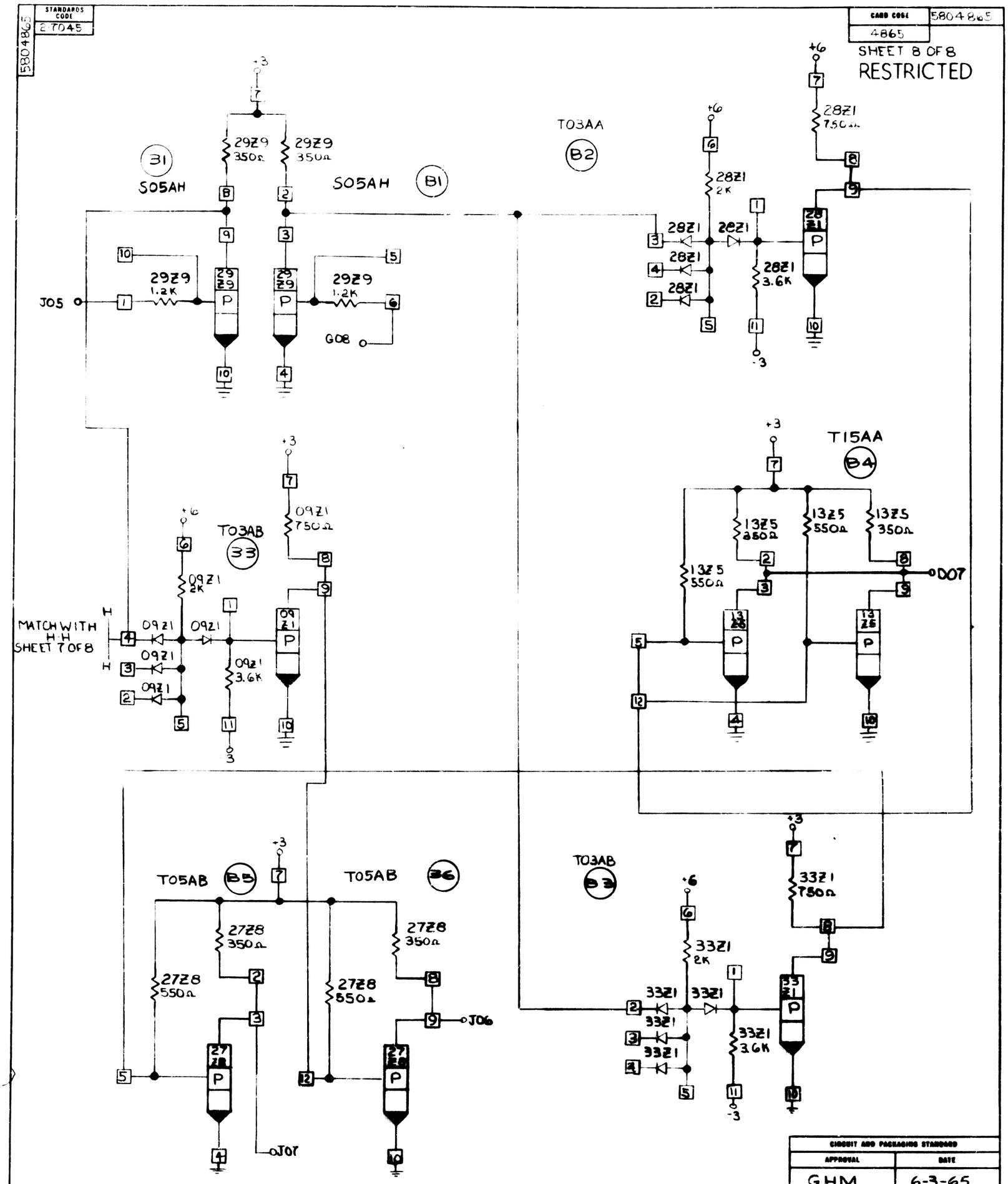
STANDARDS CODE
2 T045
5804865
CARD CODE
4865
SHEET 8 OF 8
RESTRICTED
+3
29Z9
350Ω
31
S05AH
B1
29Z9
1.2K
J05
G08
T03AA
B2
+6
28Z1
750Ω
28Z1
2K
28Z1
3.6K
-3
T03AB
33
09Z1
750Ω
09Z1
2K
09Z1
3.6K
MATCH WITH
H-H
SHEET 7 OF 8
T15AA
B4
13Z5
350Ω
13Z5
550Ω
D07
T05AB
B5
B6
27Z8
350Ω
27Z8
550Ω
J06
J07
T03AB
B3
33Z1
750Ω
33Z1
2K
33Z1
3.6K
CIRCUIT AND PACKAGING STANDARD
APPROVAL
DATE
GHM
6-3-65
DATE
CHARGE NO.
APPROVAL
DEVELOPMENT NO.
11-6-64
161909
6-17-65
164600
11AUG66
169737
25SEP66
168760
5804865
C