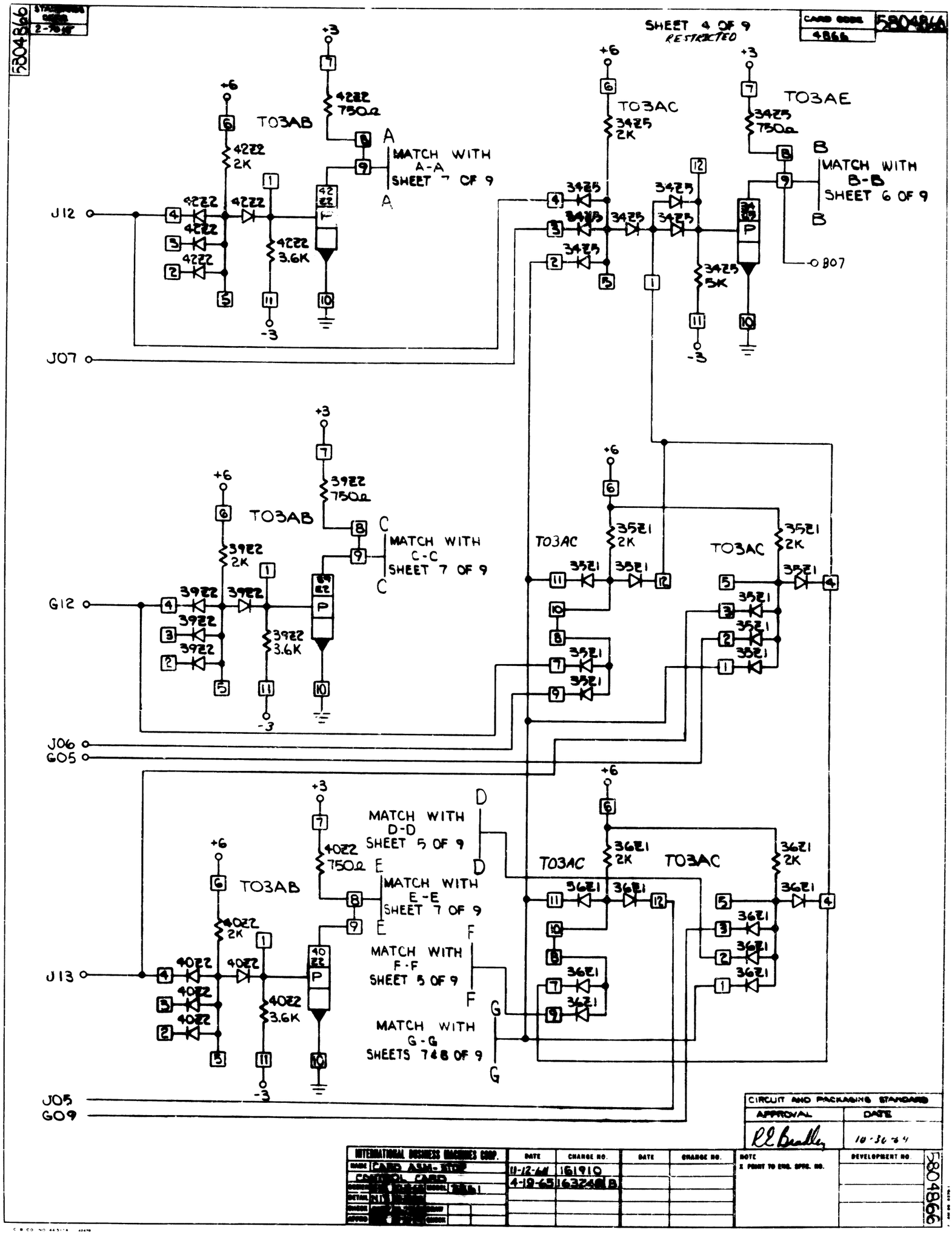
SHEET 4 OF 9
RESTRICTED
CARD CODE 4866
5804866
T03AB
T03AC
T03AE
4222 750Ω
4222 2K
4222 3.6K
3425 750Ω
3425 2K
3425 5K
MATCH WITH A-A SHEET 7 OF 9
MATCH WITH B-B SHEET 6 OF 9
B07
J12
J07
3922 750Ω
3922 2K
3922 3.6K
3521 2K
MATCH WITH C-C SHEET 7 OF 9
G12
J06
G05
4022 750Ω
4022 2K
4022 3.6K
3621 2K
MATCH WITH D-D SHEET 5 OF 9
MATCH WITH E-E SHEET 7 OF 9
MATCH WITH F-F SHEET 5 OF 9
MATCH WITH G-G SHEETS 7&8 OF 9
J13
J05
G09
CIRCUIT AND PACKAGING STANDARD
APPROVAL
DATE
10-30-64
INTERNATIONAL BUSINESS MACHINES CORP.
CARD ASM-STOP
CONTROL CARD
11-12-64 161910
4-19-65 163246 B
DEVELOPMENT NO.
5804866