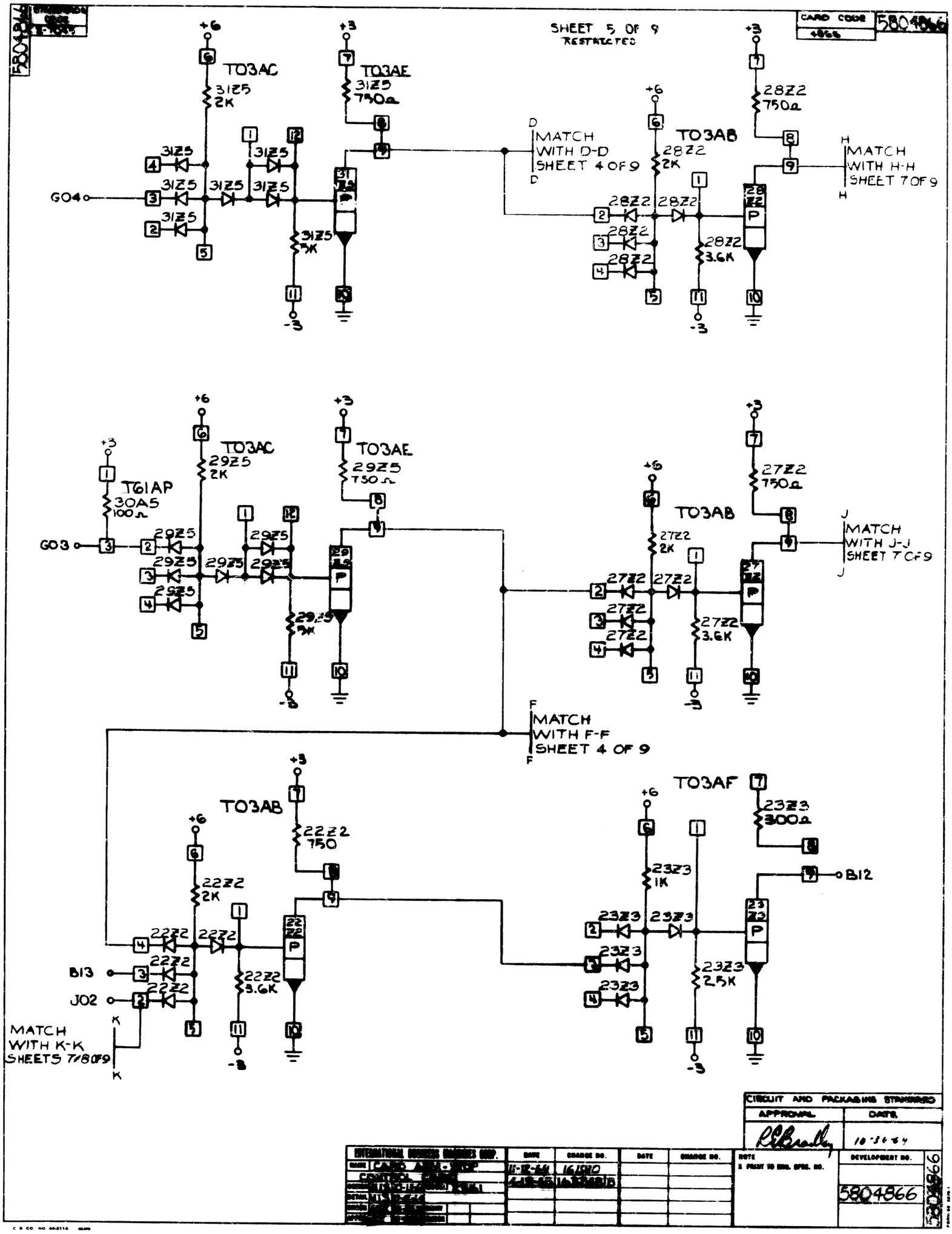
SHEET 5 OF 9
RESTRICTED
CARD CODE
5804866
T03AC
T03AE
T03AB
T03AF
T61AP
G04
G03
B13
J02
B12
MATCH WITH D-D SHEET 4 OF 9
MATCH WITH H-H SHEET 7 OF 9
MATCH WITH J-J SHEET 7 OF 9
MATCH WITH F-F SHEET 4 OF 9
MATCH WITH K-K SHEETS 7/8 OF 9
CIRCUIT AND PACKAGING STANDARD
APPROVAL
DATE
DEVELOPMENT NO.
5804866