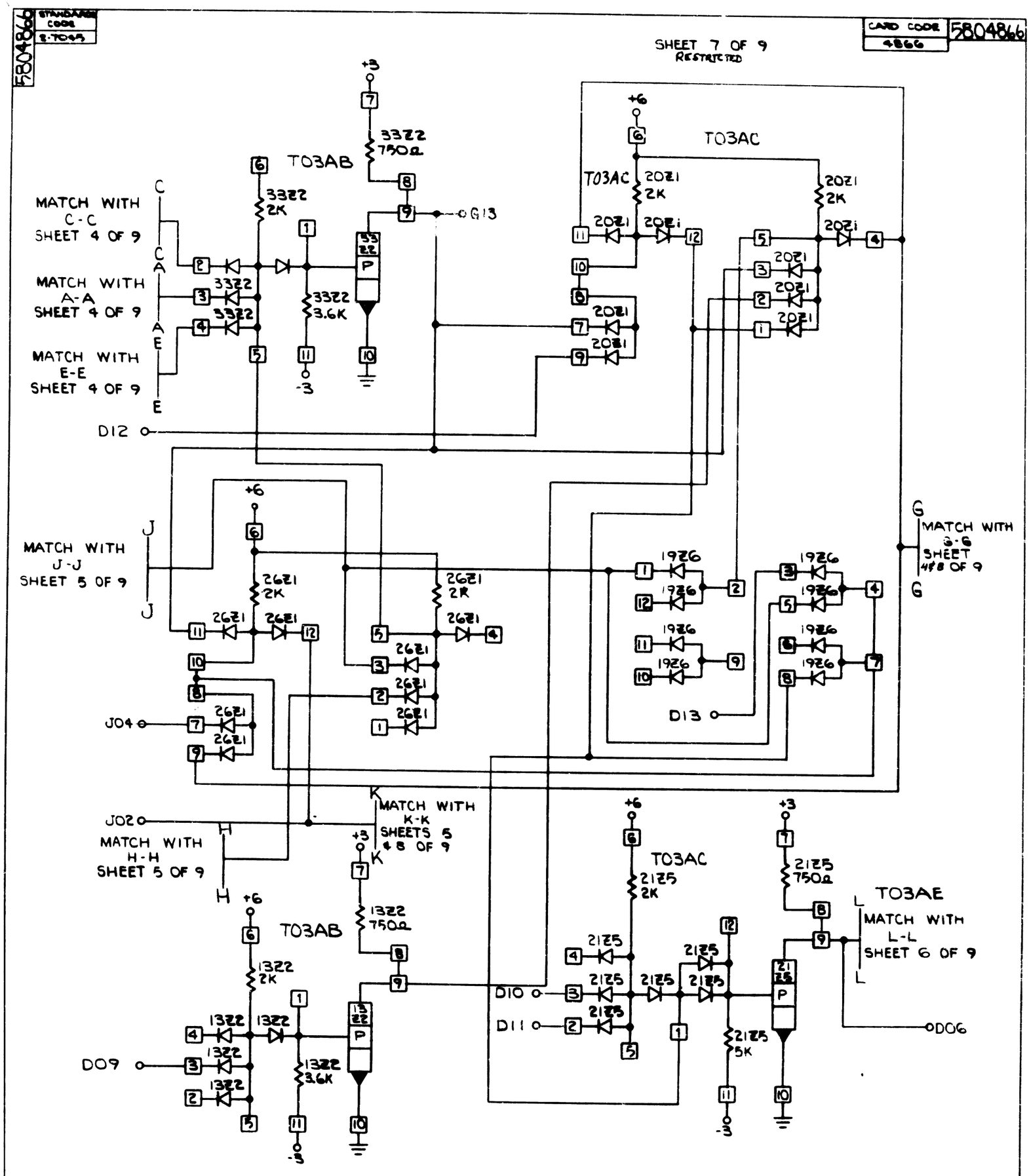
5804866
STANDARD CODE
E-T045
CARD CODE
4866
5804866
SHEET 7 OF 9
RESTRICTED
+3
3322
750Ω
T03AB
3322
2K
3322
3.6K
-3
G13
MATCH WITH
C-C
SHEET 4 OF 9
MATCH WITH
A-A
SHEET 4 OF 9
MATCH WITH
E-E
SHEET 4 OF 9
D12
+6
T03AC
2021
2K
MATCH WITH
J-J
SHEET 5 OF 9
2621
2K
1926
MATCH WITH
G-G
SHEET
4 & 8 OF 9
D13
J04
J02
MATCH WITH
H-H
SHEET 5 OF 9
MATCH WITH
K-K
SHEETS 5
& 8 OF 9
1322
750Ω
1322
2K
1322
3.6K
D09
T03AC
2125
2K
2125
750Ω
2125
5K
D10
D11
T03AE
MATCH WITH
L-L
SHEET 6 OF 9
D06
CIRCUIT AND PACKAGING STANDARD
APPROVAL
DATE
R C Bradley
10-20-64
INTERNATIONAL BUSINESS MACHINES CORP.
CARD ASSY - STOP
CONTROL CARD
DATE
CHANGE NO.
11-12-64
161910
4-19-65
163248
DEVELOPMENT NO.
5804866