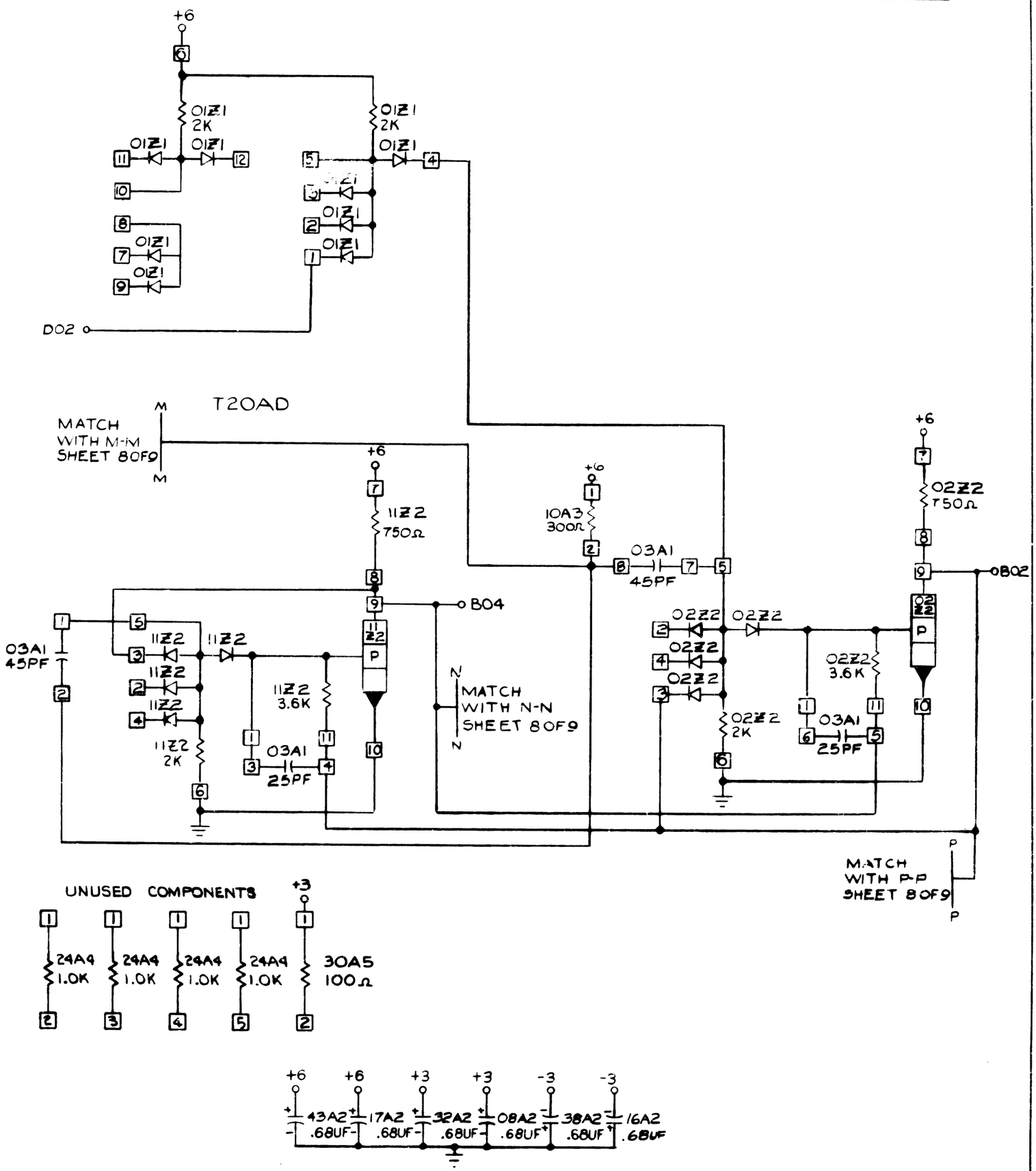

UNUSED COMPONENTS

CIRCUIT AND PACKAGING STANDARD	
APPROVAL	DATE
R E Bradley	10-30-64

INTERNATIONAL BUSINESS MACHINES CORP.	DATE	CHANGE NO.	DATE	CHANGE NO	NOTE	DEVELOPMENT NO.
NAME CARD ASM - STOP	11-12-64	161910			X POINT TO ENG. SPEC. NO.	
CONTROL CARD	4-10-65	163248B				
DESIGN NIS MODEL 2						5804866
DETAIL NIS						
CHECK						
APPRO						

5804866