STANDARDS CODE 2-7045

5804868

CARD CODE 4868

SHEET 4 OF 9
RESTRICTED

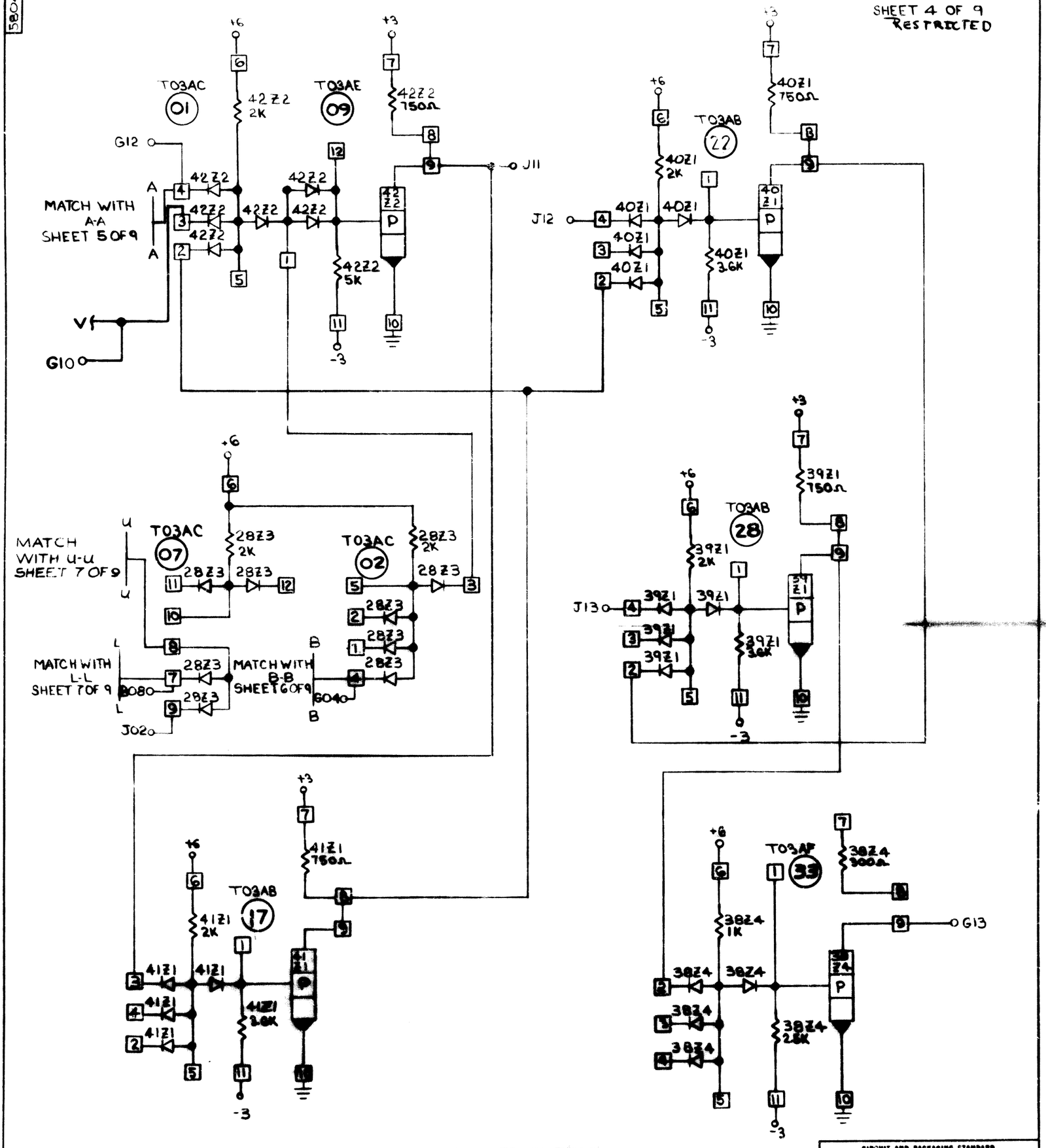

B11 AND G11 ARE BURIED
J08 AND D08 ARE BURIED
G08 AND B08 ARE BURIED
J08 AND D08 ARE BURIED

CIRCUIT AND PACKAGING STANDARD	
APPROVAL	DATE
R C Bradley	11-6-64

DATE	CHANGE NO.	APPROVAL	DATE	CHANGE NO.	APPROVAL	DEVELOPMENT NO.
11-19-64	161912					5804868

C

5804868