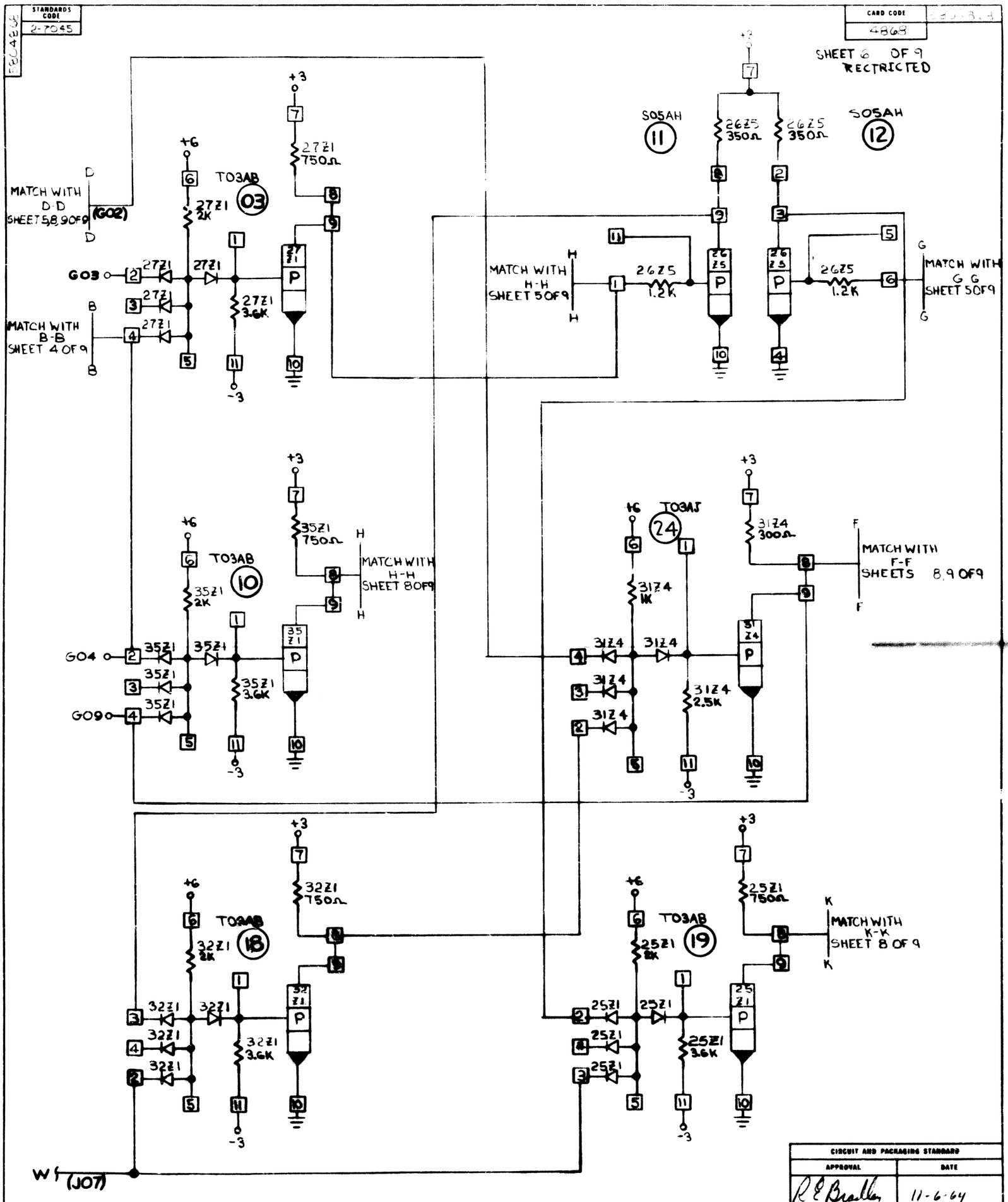
STANDARDS CODE
2-7045
CARD CODE
4868
SHEET 6 OF 9
RESTRICTED
MATCH WITH D-D SHEET 5,8,9 OF 9 (G02)
G03
MATCH WITH B-B SHEET 4 OF 9
T03AB 03
27Z1 2K
27Z1 750Ω
27Z1 3.6K
S05AH 11
S05AH 12
26Z5 350Ω
26Z5 1.2K
MATCH WITH H-H SHEET 5 OF 9
MATCH WITH G-G SHEET 5 OF 9
T03AB 10
35Z1 2K
35Z1 750Ω
35Z1 3.6K
MATCH WITH H-H SHEET 8 OF 9
G04
G09
T03AJ 24
31Z4 1K
31Z4 300Ω
31Z4 2.5K
MATCH WITH F-F SHEETS 8,9 OF 9
T03AB 18
32Z1 2K
32Z1 750Ω
32Z1 3.6K
T03AB 19
25Z1 2K
25Z1 750Ω
25Z1 3.6K
MATCH WITH K-K SHEET 8 OF 9
W (J07)
CIRCUIT AND PACKAGING STANDARD
APPROVAL
DATE
11-6-64
CARD ASSY
PRIORITY CONTROL
DATE
CHANGE NO.
APPROVAL
DEVELOPMENT NO.
11-19-64
161912
5804868
C