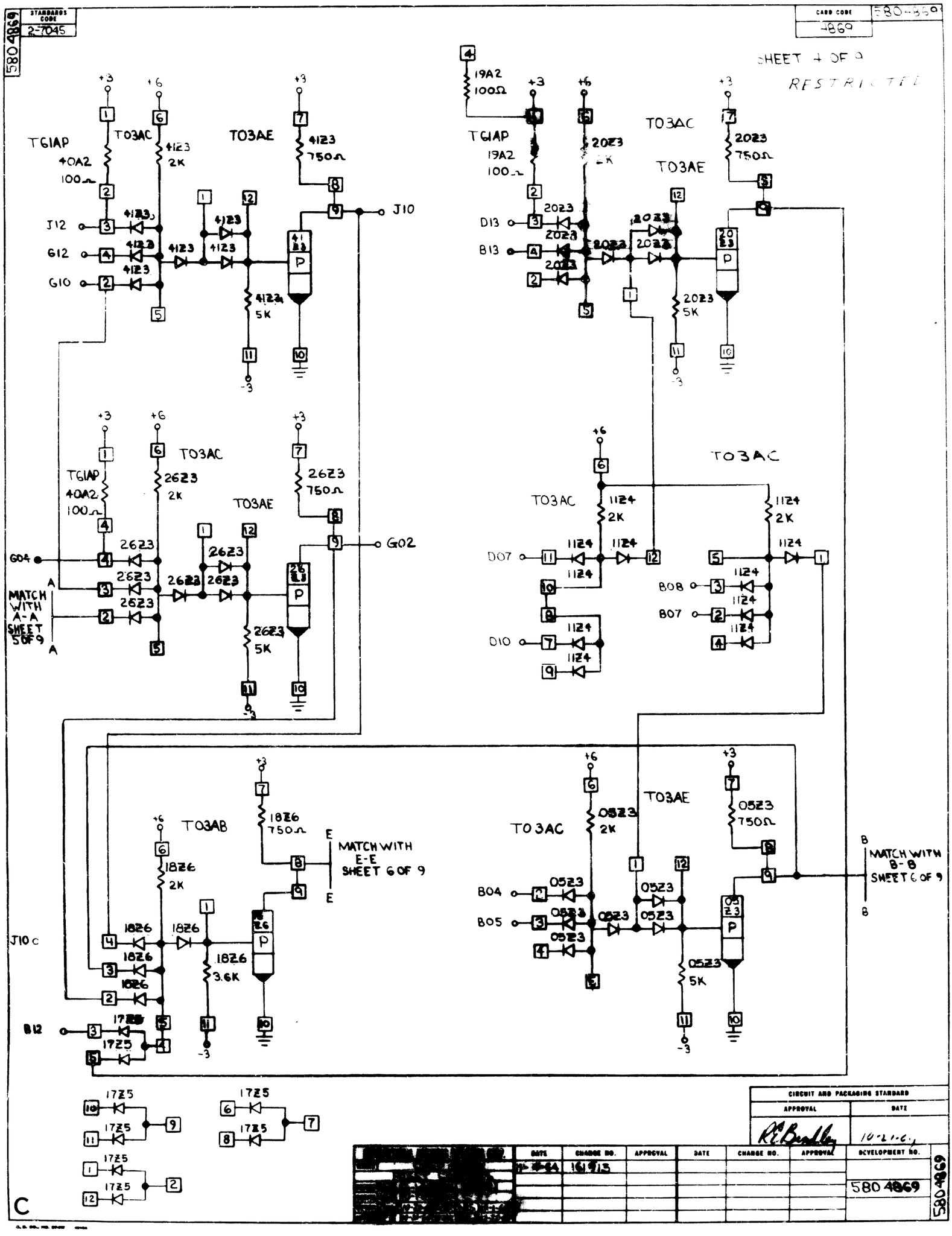
STANDARDS CODE 2-7045
CARD CODE 580-869
580 4869
SHEET 4 OF 9
RESTRICTED
T61AP
40A2
100Ω
T03AC
4123
2K
T03AE
4123
750Ω
4123
5K
J12
G12
G10
J10
T61AP
19A2
100Ω
T03AC
2023
2K
T03AE
2023
750Ω
2023
5K
D13
B13
T61AP
40A2
100Ω
T03AC
2623
2K
T03AE
2623
750Ω
2623
5K
G04
G02
MATCH WITH A-A SHEET 5 OF 9
T03AC
1124
2K
D07
D10
B08
B07
T03AB
1826
750Ω
1826
2K
1826
3.6K
MATCH WITH E-E SHEET 6 OF 9
J10 c
B12
17Z5
T03AC
0523
2K
T03AE
0523
750Ω
0523
5K
B04
B05
MATCH WITH B-B SHEET 6 OF 9
CIRCUIT AND PACKAGING STANDARD
APPROVAL
DATE
DEVELOPMENT NO.
580 4869
C