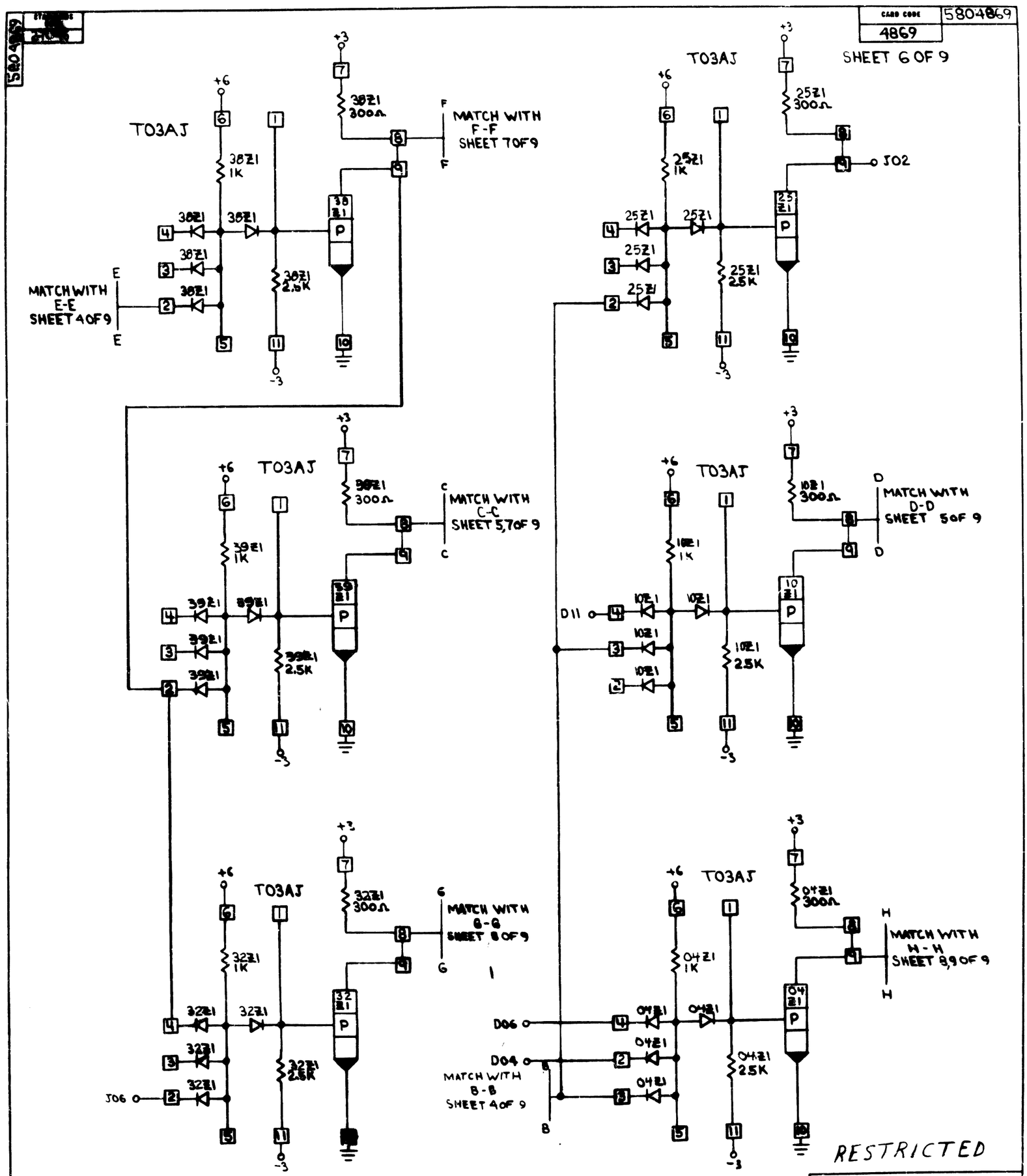
CARD CODE 5804869
4869
SHEET 6 OF 9
T03AJ
+6
+3
-3
38Z1 1K
38Z1 300Ω
38Z1 2.5K
MATCH WITH E-E SHEET 4 OF 9
MATCH WITH F-F SHEET 7 OF 9
25Z1 1K
25Z1 300Ω
25Z1 2.5K
J02
39Z1 1K
39Z1 300Ω
39Z1 2.5K
MATCH WITH C-C SHEET 5,7 OF 9
10Z1 1K
10Z1 300Ω
10Z1 2.5K
D11
MATCH WITH D-D SHEET 5 OF 9
32Z1 1K
32Z1 300Ω
32Z1 2.5K
J06
MATCH WITH G-G SHEET 8 OF 9
04Z1 1K
04Z1 300Ω
04Z1 2.5K
D06
D04
MATCH WITH B-B SHEET 4 OF 9
MATCH WITH H-H SHEET 8,9 OF 9
RESTRICTED
CIRCUIT AND PACKAGING STANDARD
APPROVAL
DATE
R E Bradley
10-21-69
DATE
CHANGE NO.
APPROVAL
DEVELOPMENT NO.
5804869
C