CARD CODE 5804869
4869

SHEET 9 OF 9

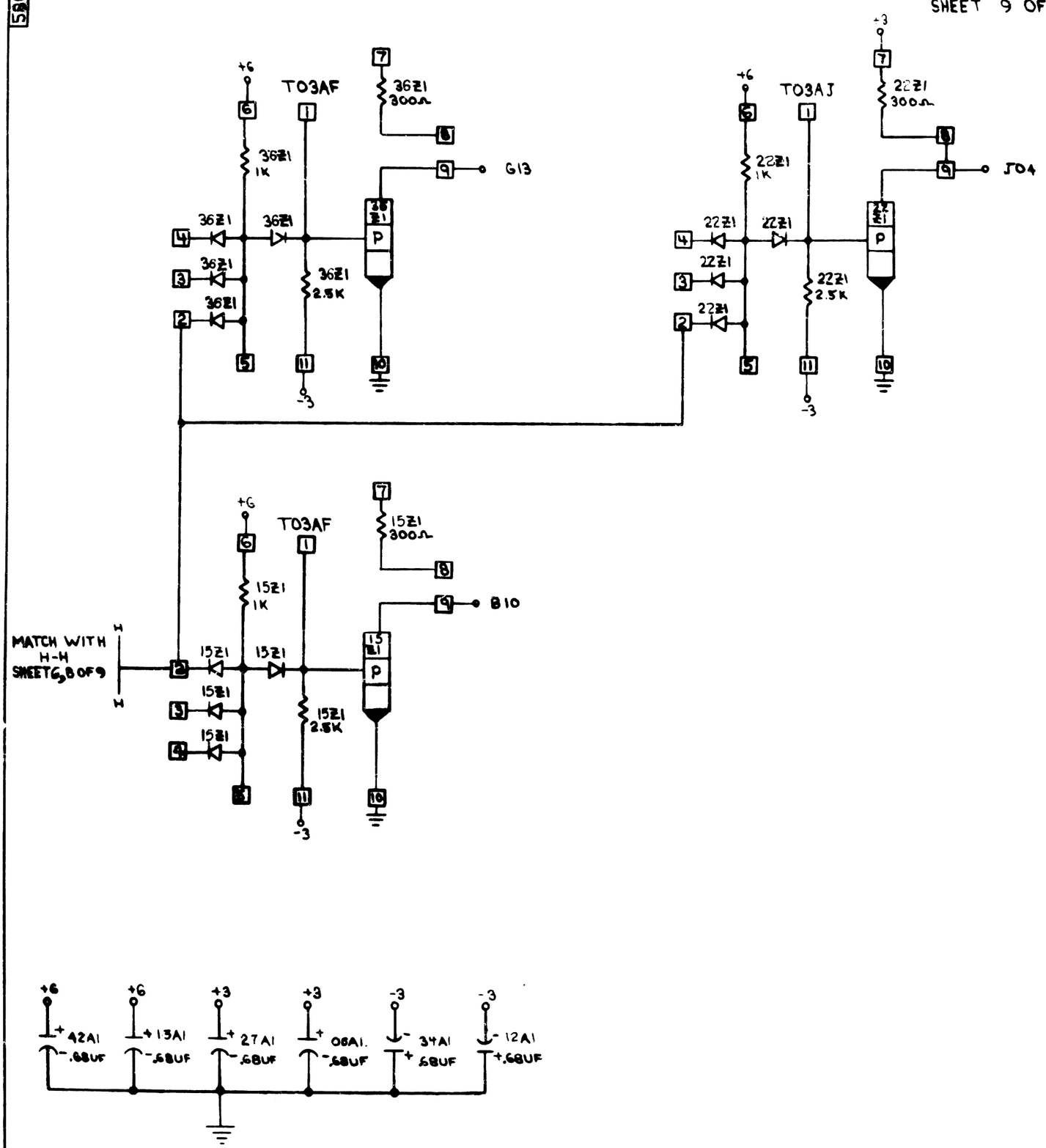

RESTRICTED

CIRCUIT AND PACKAGING STANDARD	
APPROVAL	DATE
R E Bradley	10-21-64

	DATE	CHANGE NO.	APPROVAL	DATE	CHANGE NO.	APPROVAL	DEVELOPMENT NO.
[redacted]	11-4-64	161[redacted]					5804869

C

5804869