FORM 2-7045-6 (6-63)

STANDARDS CODE	CIRCUIT AND PACKAGING STANDARD		SYM	DATE	CHANGE NO	TECH APPRO	SYM	DATE	CHANGE NO	TECH APPRO	DEVELOPMENT NO	Q/M
~~2-6240~~				14-12-4	DEV 3749			28OCT65	165865	D	PC4042D	
CARD CODE	APPROVAL	DATE		12-30-64	161649			3MAR66	167346	E		
4871	EVD	30FEB69		7-14-65	163828	B		7JUL66	167711	F	5804871	
				19-AUG-65	164944	C		24MAR69	179325	G		

SHEET 5 OF 6

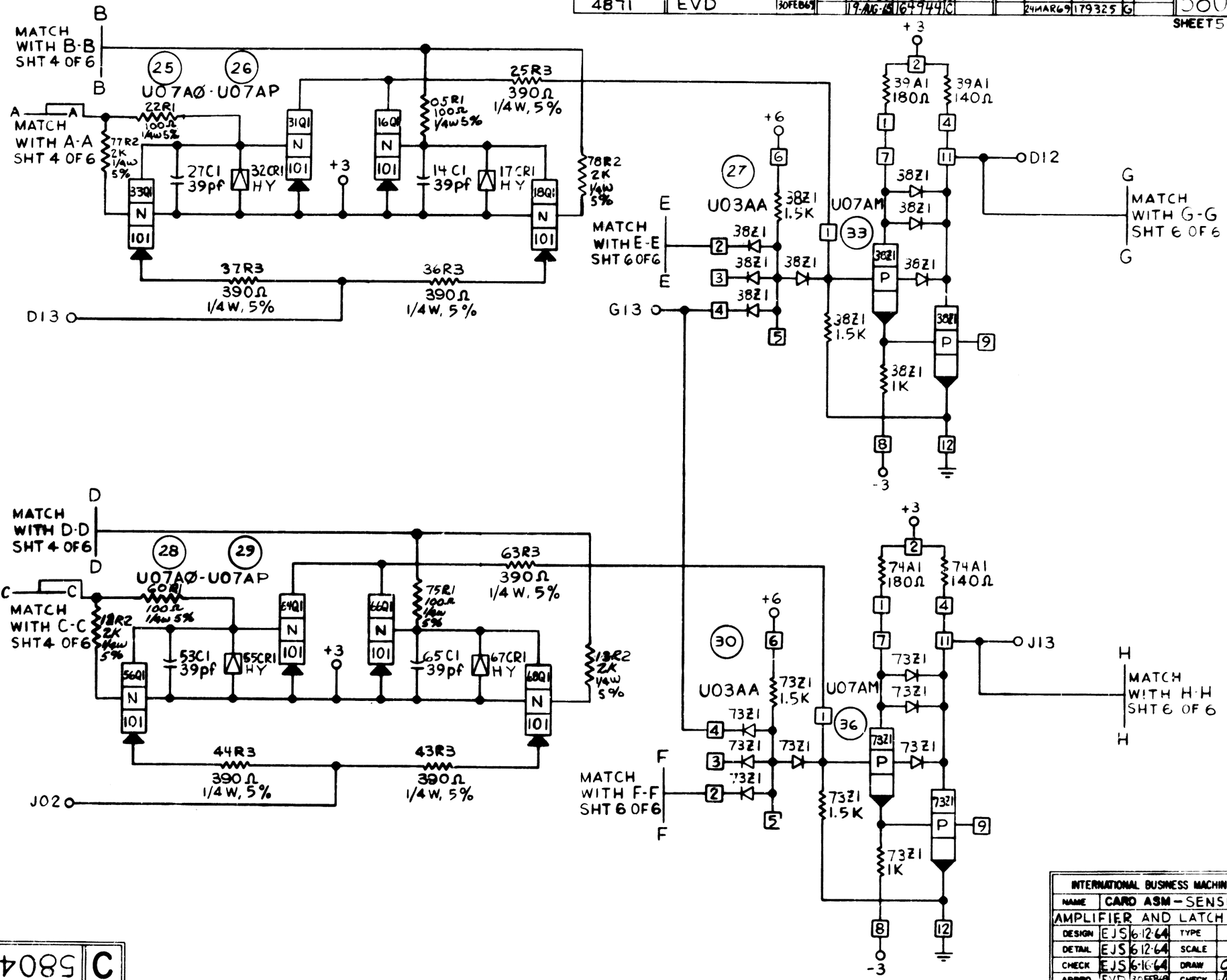

INTERNATIONAL BUSINESS MACHINES CORP				
NAME	CARD ASM - SENSE AMPLIFIER AND LATCH (2 BITS)			
DESIGN	EJS 6-12-64	TYPE	2362	
DETAIL	EJS 6-12-64	SCALE	NONE	
CHECK	EJS 6-16-64	DRAW	OV 7-30-64	
APPRO	EVD 30FEB69	CHECK	JBM 7-31-64	

C 5804871