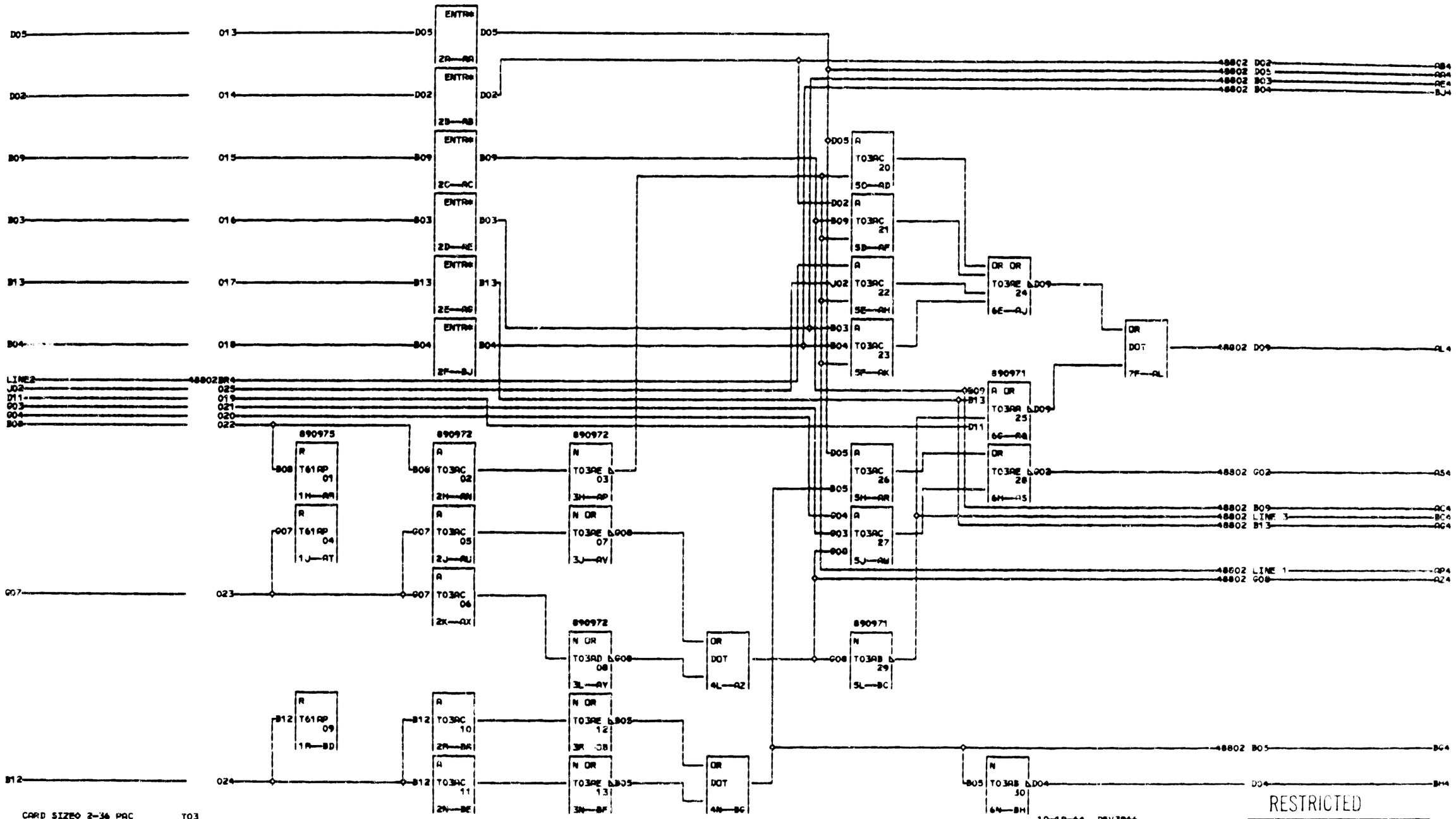

CARD SIZED 2-36 PAC T03
VOLTAGE PINS
4 +6V08110611 -3V0D030J03
8 -3V08060606 ONDOD08QJ08
8 SPECIAL RESTRICTED
0
1

000

RESTRICTED

DECIMAL TO BINARY ADDR XLATOR	4
DATE 00-00-00 MACH. ASSEMBLY	8
LOG 120 FRAME	8
CD PG 1 OF 2 P.N. 5804880	0 1
IBM CORP. PD BLK. BK	000