STANDARDS CODE	CIRCUIT AND PACKAGING STANDARD		SYM	DATE	CHANGE NO	TECH APPRO	SYM	DATE	CHANGE NO	TECH APPRO	DEVELOPMENT NO	Q/M
2-7046					DEV 3966							
CARD CODE	APPROVAL	DATE			162275							
4880	GHM	3-10-65		4-10-65	163572B						5804880	

SHEET 10 OF 10

RESTRICTED

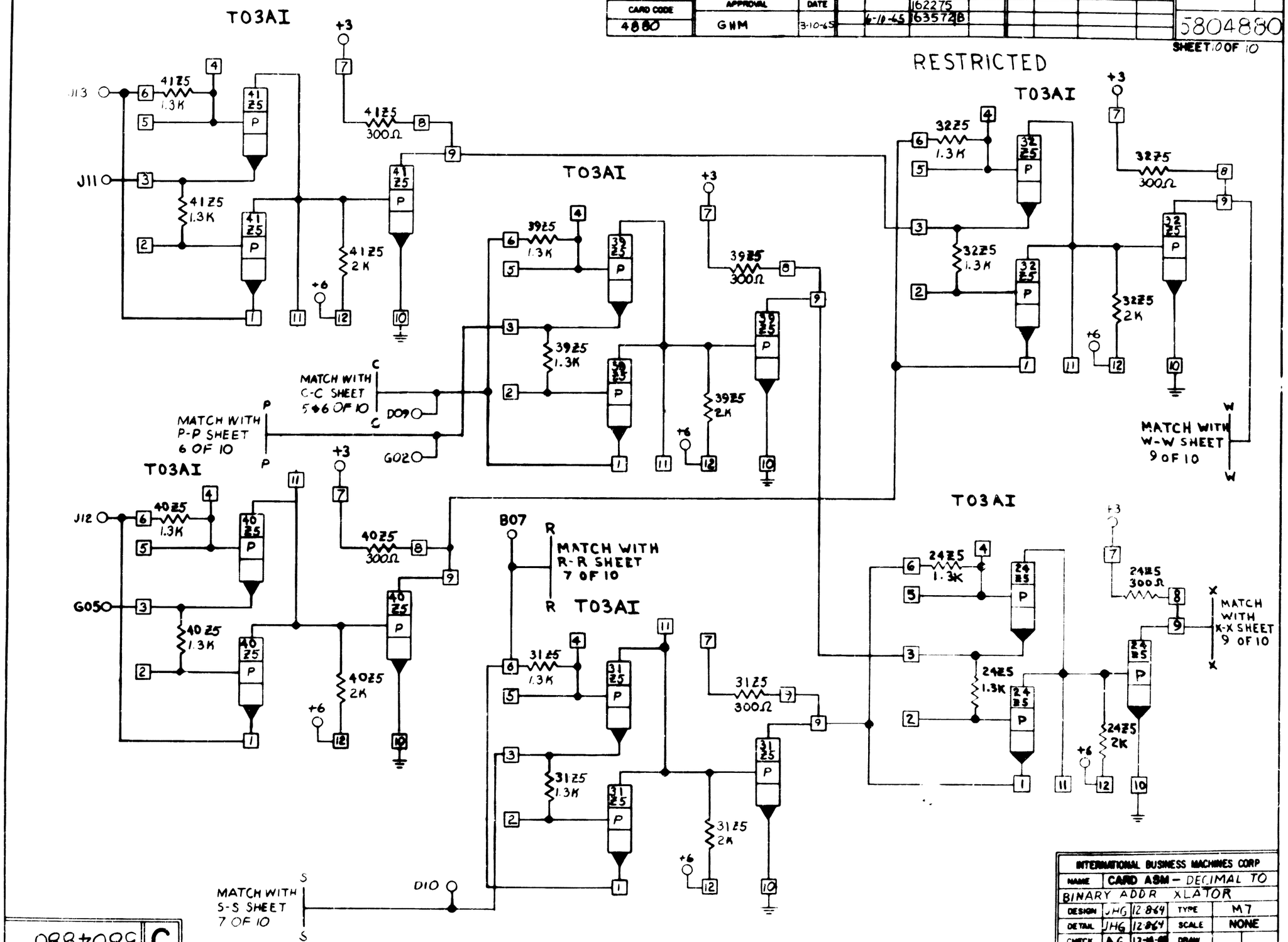

INTERNATIONAL BUSINESS MACHINES CORP					
NAME	CARD ASM – DECIMAL TO BINARY ADDR XLATOR				
DESIGN	JHG	12-8-64	TYPE	M7	
DETAIL	JHG	12-8-64	SCALE	NONE	
CHECK	A.G	12-14-64	DRAW		
APPRO	GHM	3-10-65	CHECK		

C 5804880