STANDARDS CODE	CIRCUIT AND PACKAGING STANDARD		SYM	DATE	CHANGE NO	TECH APPRO	SYM	DATE	CHANGE NO	TECH APPRO	DEVELOPMENT NO	Q/M
2-7045				2-5-65	162285							
CARD CODE	APPROVAL	DATE									5804882	
4882	G.H.M	1-20-65										

SHEET 5 OF 8

RESTRICTED

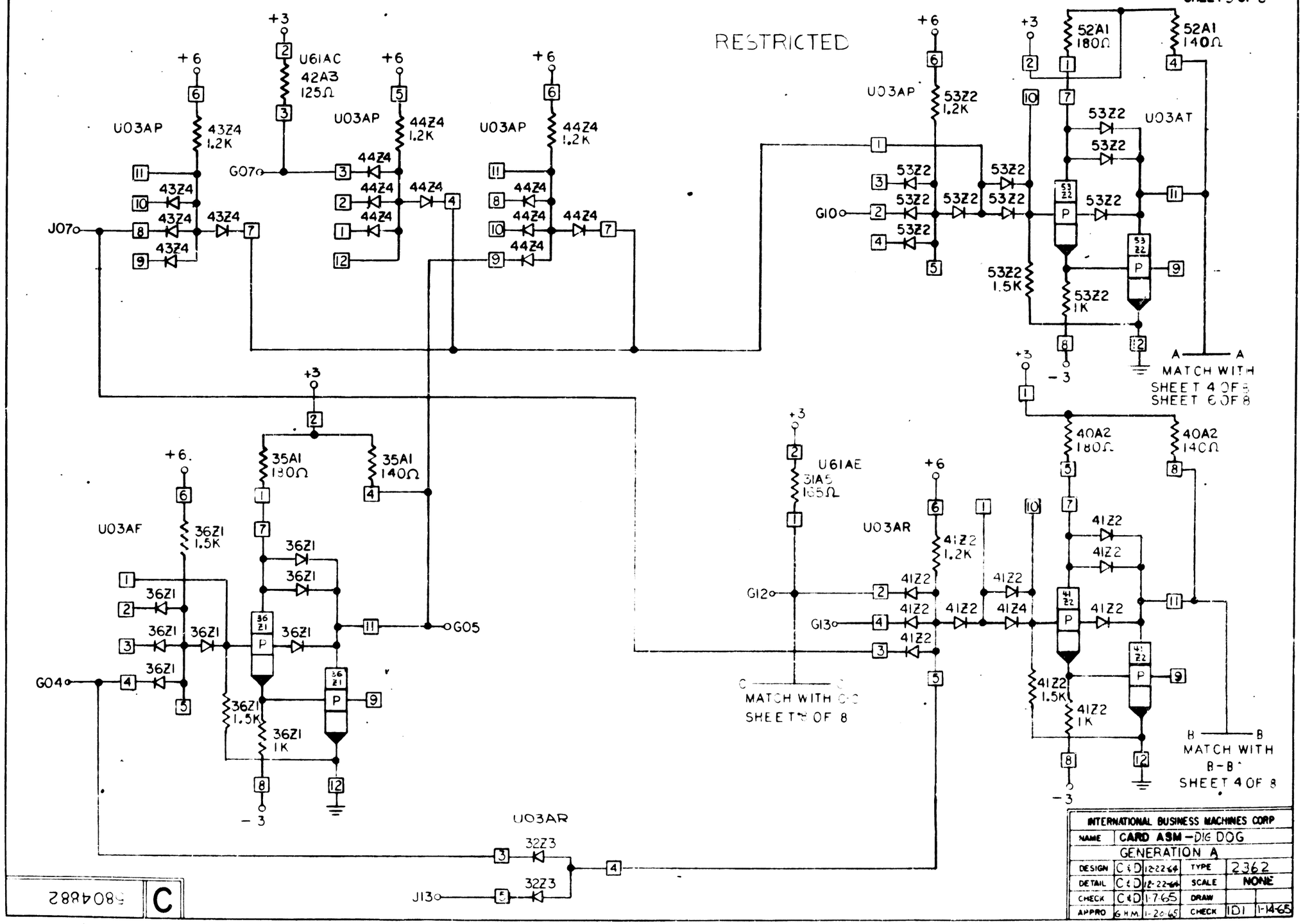

INTERNATIONAL BUSINESS MACHINES CORP					
NAME	CARD ASM — DIG DOG				
	GENERATION A				
DESIGN	C & D	12-22-64	TYPE	2362	
DETAIL	C & D	12-22-64	SCALE	NONE	
CHECK	C & D	1-7-65	DRAW		
APPRO	G.H.M.	1-20-65	CHECK	IDI	1-14-65

5804882 C