FORM Z-7045-6 (8-63)

STANDARDS CODE	CIRCUIT AND PACKAGING STANDARD		SYM	DATE	CHANGE NO.	TECH APPRO	SYM	DATE	CHANGE NO.	TECH APPRO	DEVELOPMENT NO	Q/W
2-7045				1-18-65	162289							
CARD CODE	APPROVAL	DATE									5804883	
4883	G.H.M.	1-25-65										

SHEET 7 OF 9

RESTRICTED

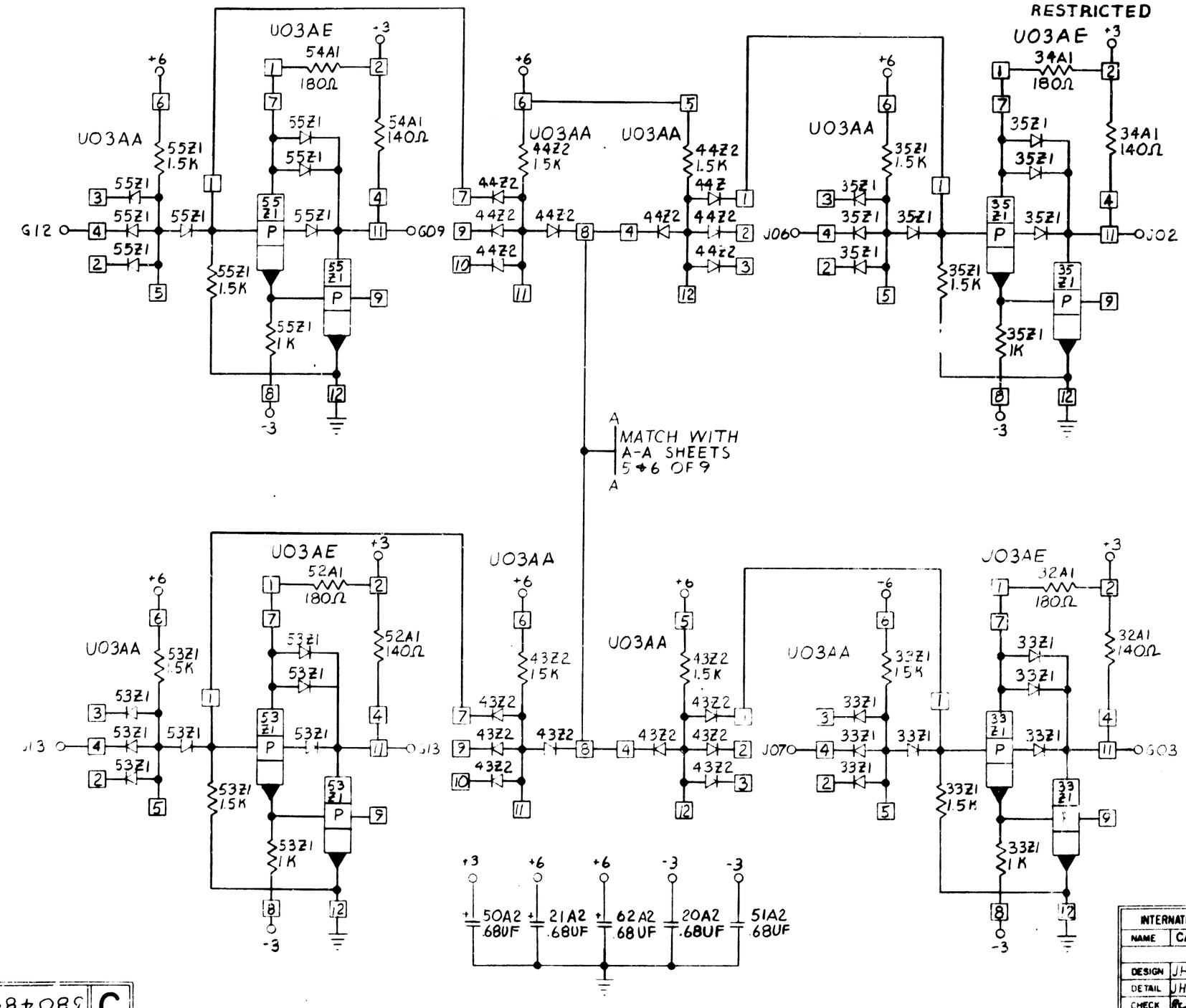

INTERNATIONAL BUSINESS MACHINES CORP				
NAME	CARD ASM – TEST SET BYTE			
DESIGN	JHG	1-21-65	TYPE	2362
DETAIL	JHG	1-21-65	SCALE	NONE
CHECK	RLE	1-25-65	DRAW	
APPRO	GHM	1-21-65	CHECK	

C 5804883