FORM 2-7045-6 (8-63)

STANDARDS CODE	CIRCUIT AND PACKAGING STANDARD		SYM	DATE	CHANGE NO	TECH APPRO	SYM	DATE	CHANGE NO	TECH APPRO	DEVELOPMENT NO	Q/M
2-7045	APPROVAL	DATE		1-18-65	162289							
CARD CODE												
4883	G.H.M.	1-25-65									5804883	

RESTRICTED

SHEET 8 OF 9

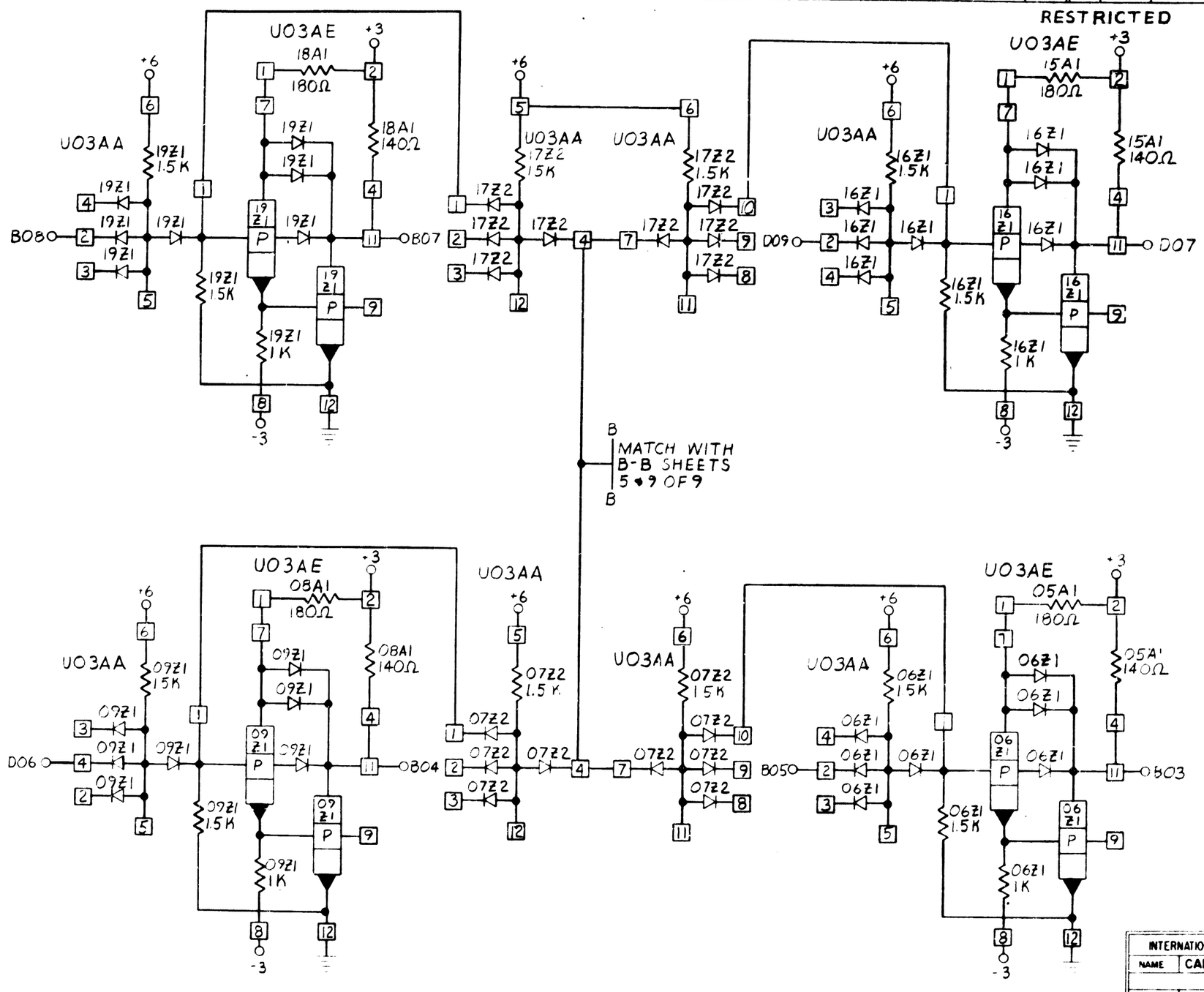

INTERNATIONAL BUSINESS MACHINES CORP				
NAME	CARD ASM – TEST SET BYTE			
DESIGN	JHG	1-21-65	TYPE	2362
DETAIL	JHG	1-21-65	SCALE	NONE
CHECK	RGE	1-25-65	DRAW	
APPRO	GHM	1-21-65	CHECK	

C 5804883