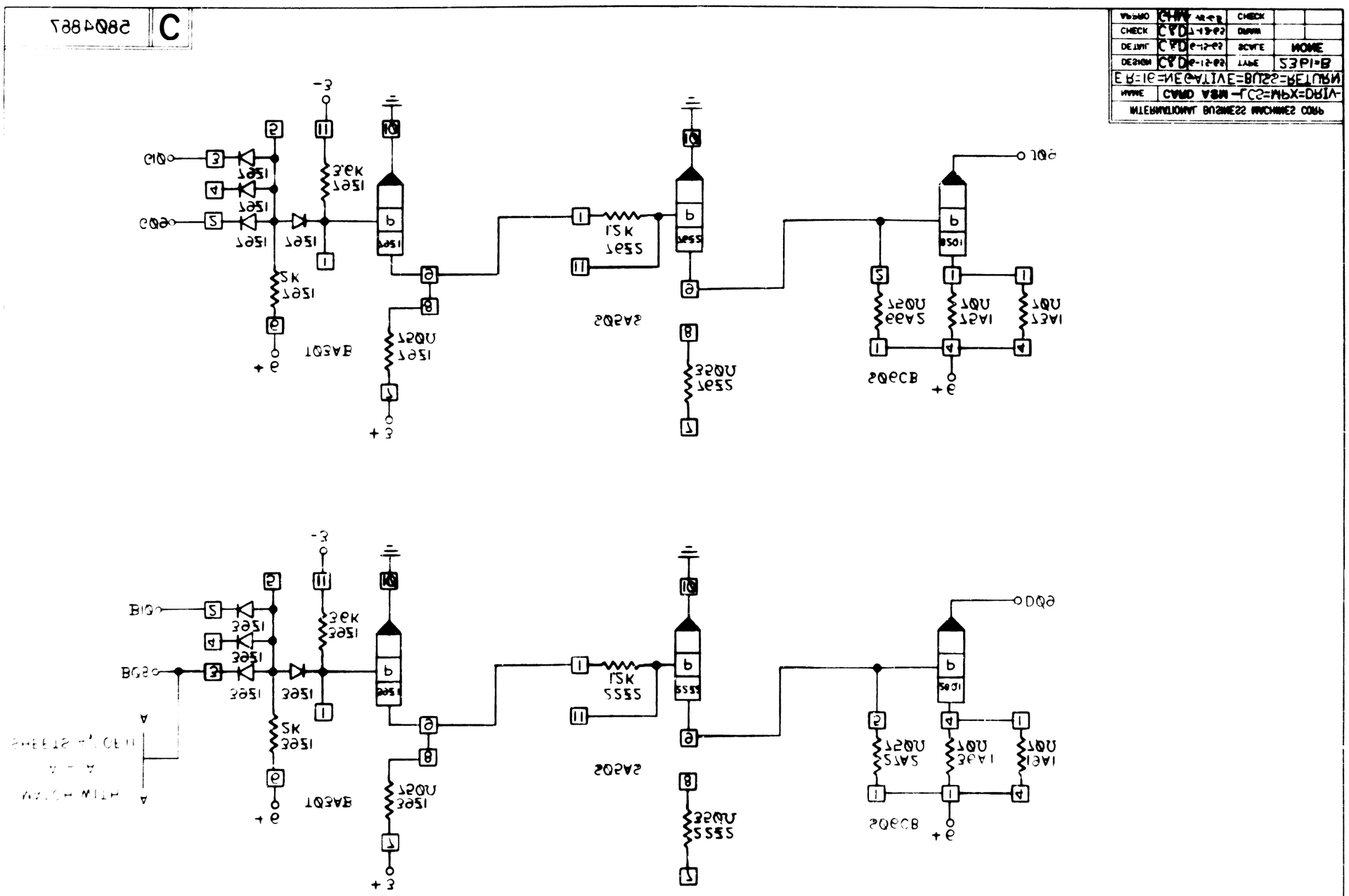
INTERNATIONAL BUSINESS MACHINES CORP.
CARD MSA -LC2=MAX=DRIV-
ER=IE=NECATIVE=BUSS=RETURN
NAME
DESIGN
DETAIL
DRAWN
CHECK
SCALE
NONE
B-1-ES
BAGOT
BAGOS
BAGOB
BAGOT
BAGOS
BAGOB
BAGOT
BAGOS
BAGOB
RESTRICTED
CIRCUIT AND
PACKAGING STANDARD
STANDARD CODE
S-DAT
CARD CODE
1884
MH
DATE
DEVELOPMENT NO
SHEET 8 OF 11