FORM Z 7045 6 (8-63)

STANDARDS CODE	CIRCUIT AND PACKAGING STANDARD		SYM	DATE	CHANGE NO	TECH APPRO	SYM	DATE	CHANGE NO	TECH APPRO	DEVELOPMENT NO.
2-7045				8-23-65	164618A						5804888
CARD CODE	APPROVAL	DATE									SHEET 5 OF 9
4888	GHM	6-15-65									

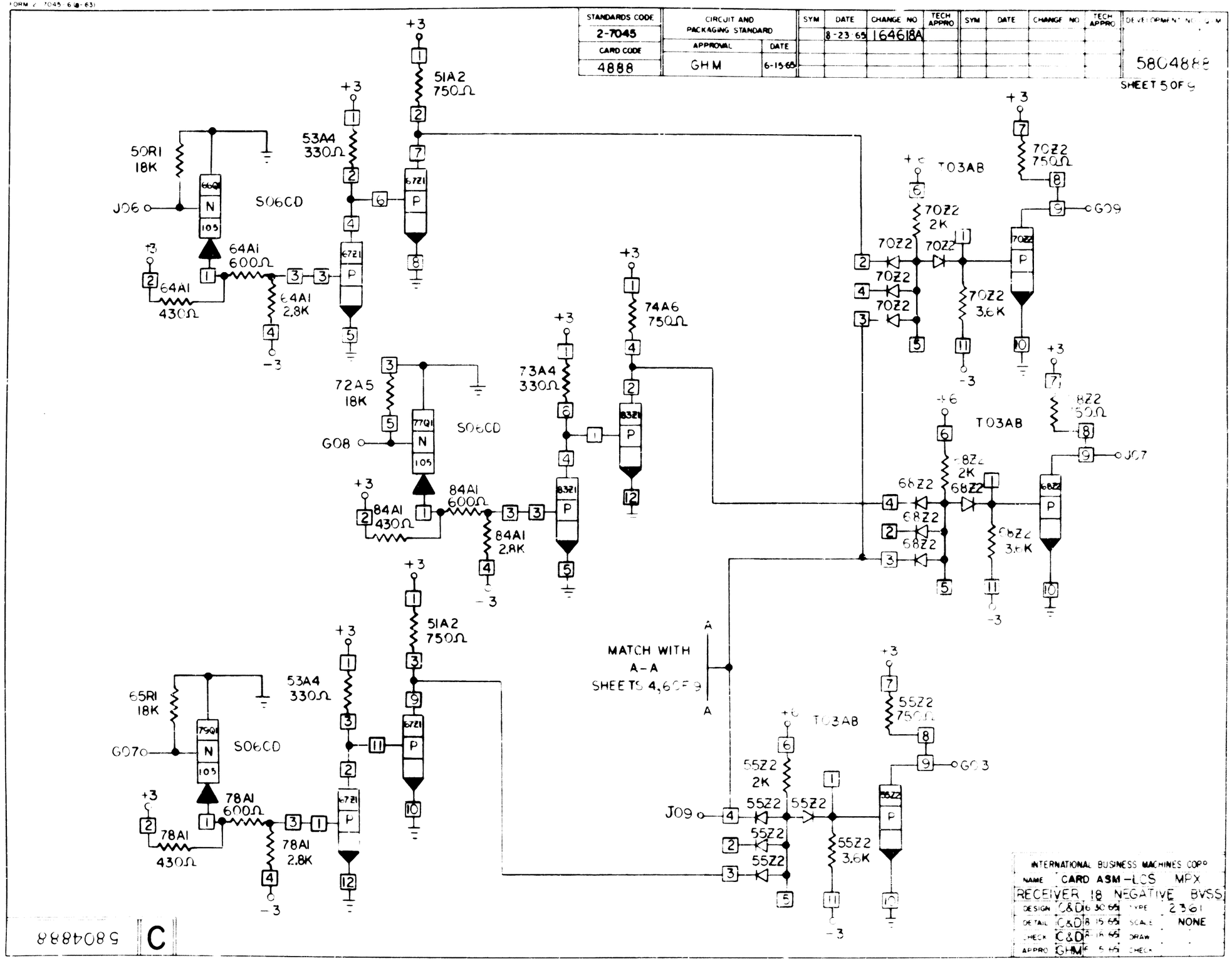

INTERNATIONAL BUSINESS MACHINES CORP.

NAME CARD ASM-LCS MPX RECEIVER 18 NEGATIVE BVSS

DESIGN	C&D	6 30 65	TYPE	2361
DETAIL	C&D	8 15 65	SCALE	NONE
CHECK	C&D	8 16 65	DRAW	
APPRO	GHM	6 5 65	CHECK	