FORM 2-7045-6 (8-63)

STANDARDS CODE	CIRCUIT AND PACKAGING STANDARD		SYM	DATE	CHANGE NO	TECH APPRO	SYM	DATE	CHANGE NO	TECH APPRO	DEVELOPMENT NO	Q/M
2-7045				10CT65	164633-A							
CARD CODE	APPROVAL	DATE										
4891	GHM	8-23-65									5804891	

SHEET 9 OF 10

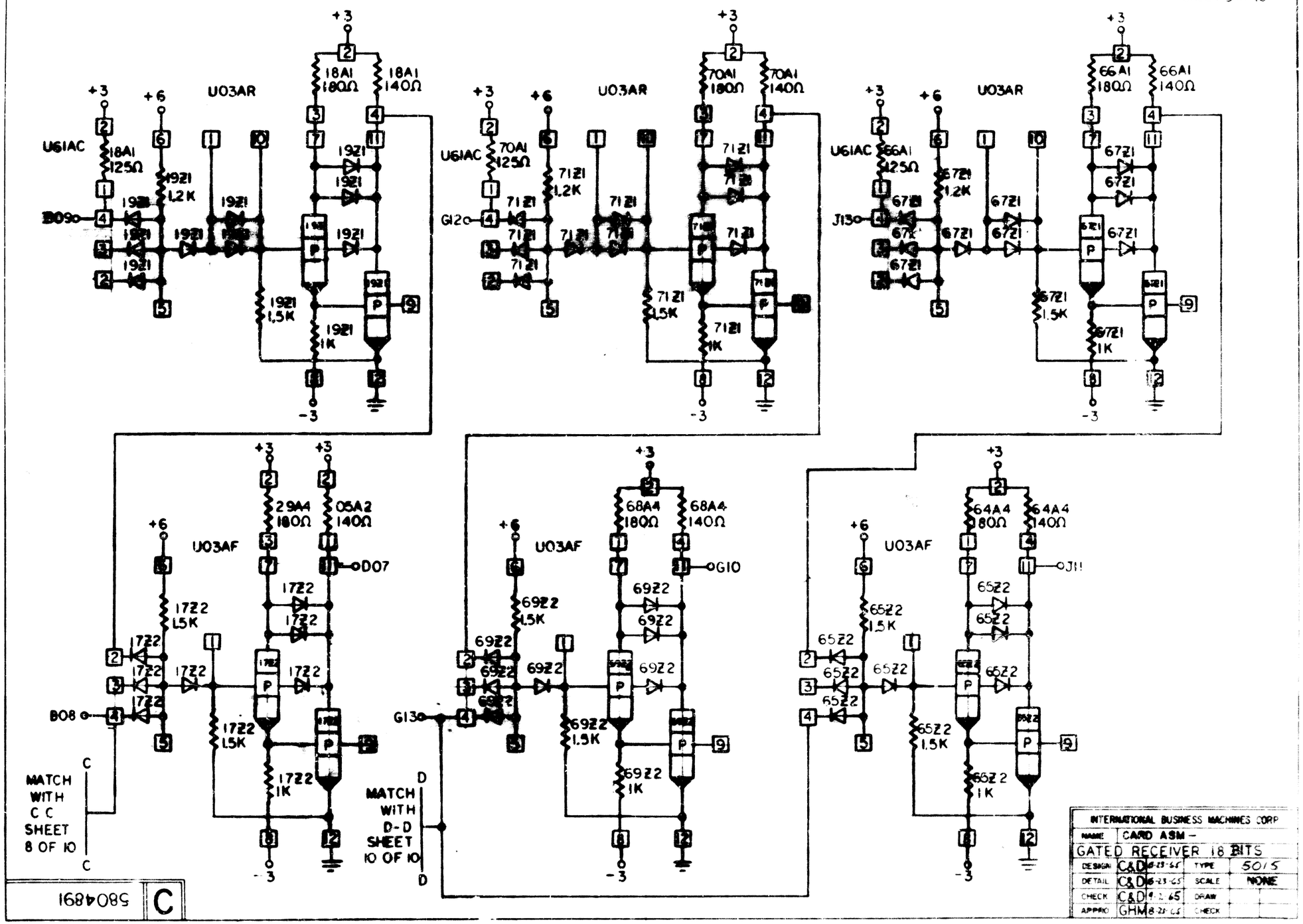

INTERNATIONAL BUSINESS MACHINES CORP				
NAME	CARD ASM – GATED RECEIVER 18 BITS			
DESIGN	C&D 8-23-65	TYPE	5015	
DETAIL	C&D 8-23-65	SCALE	NONE	
CHECK	C&D 9-2-65	DRAW		
APPRO	GHM 8-23-65	CHECK		

5804891 C