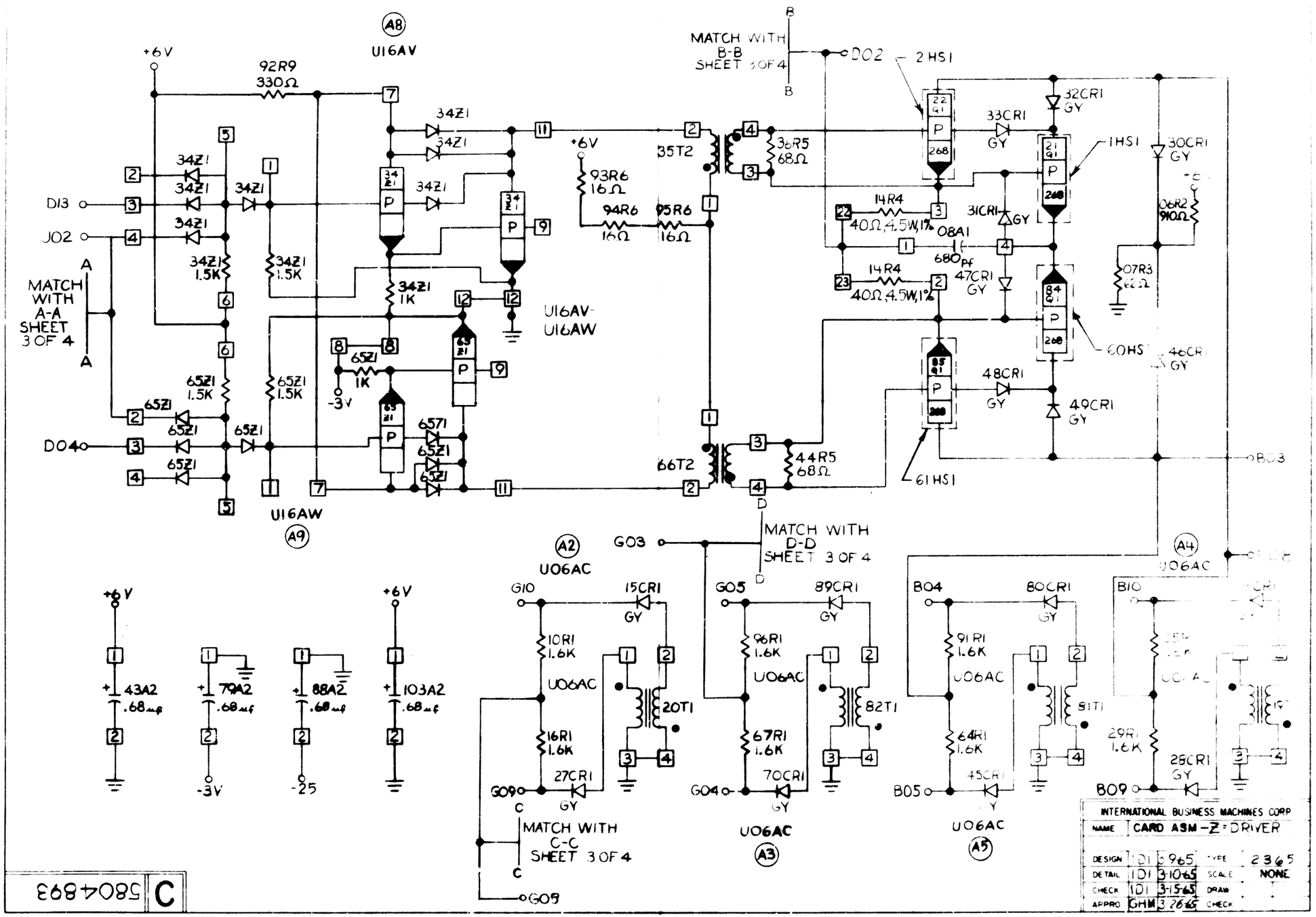STANDARDS CODE	CIRCUIT AND PACKAGING STANDARD		SYM	DATE	CHANGE NO	TECH APPRO	SYM	DATE	CHANGE NO	TECH APPRO	DRAWING NO
~~Z-6240~~				3-23-65	DEV45609						5116265
CARD CODE	APPROVAL	DATE		5-25-65	DV4998-1						5804893
4893	EVD	9FEB69		9-09-65	165554	A					SHEET OF
				13MAR69	179318	B