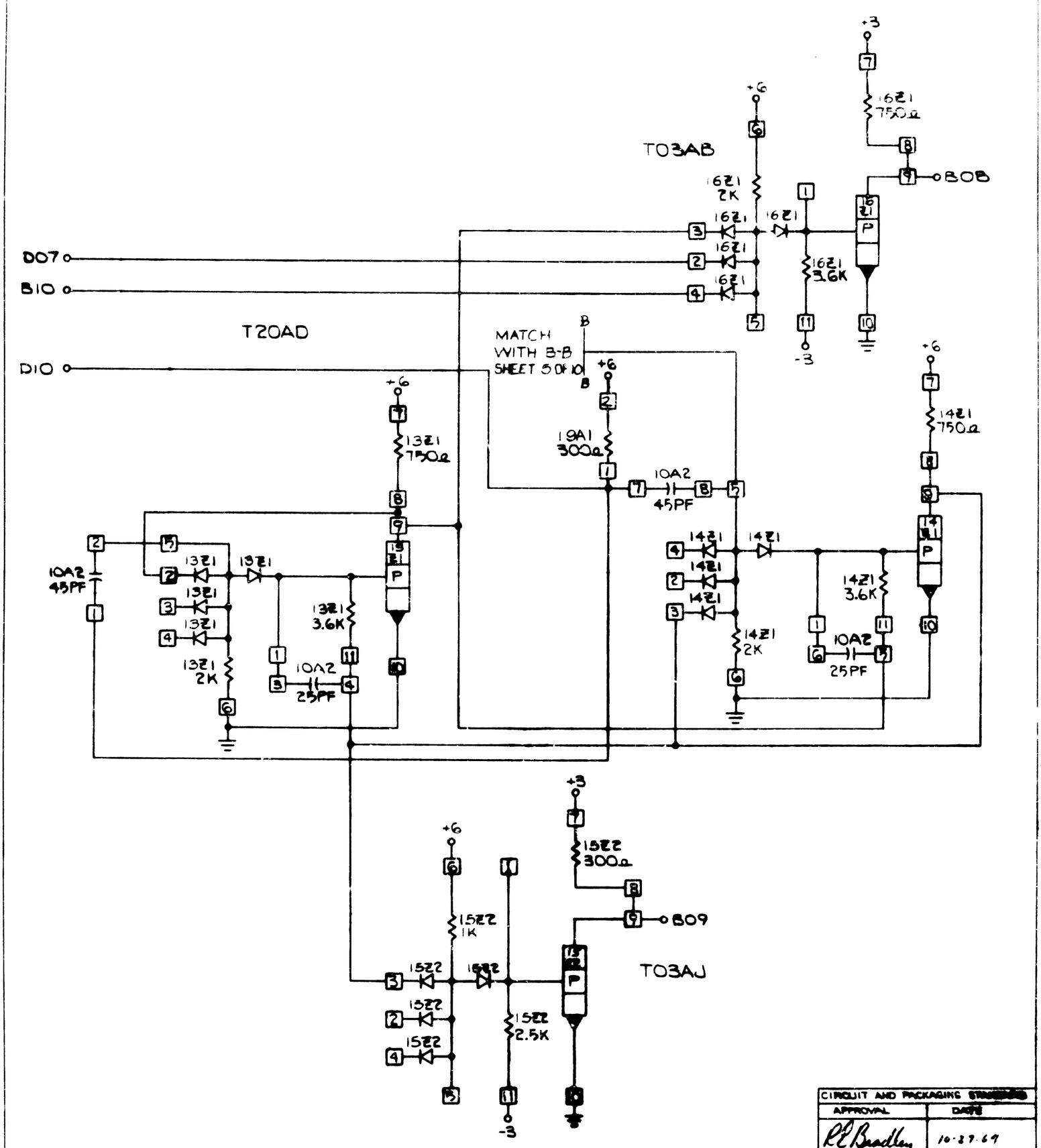

CIRCUIT AND PACKAGING	
APPROVAL	DATE
R.L. Bradley	10-27-69

DATE	CHANGE NO.	DATE	CHANGE NO.	NOTE	DEVELOPMENT NO.
[illegible]	[illegible]			X PRINT TO ENG. SPEC. NO.	
[illegible]	162[illegible]				
[illegible]	164644 C				