BOARD CODE 4897

RESTRICTED

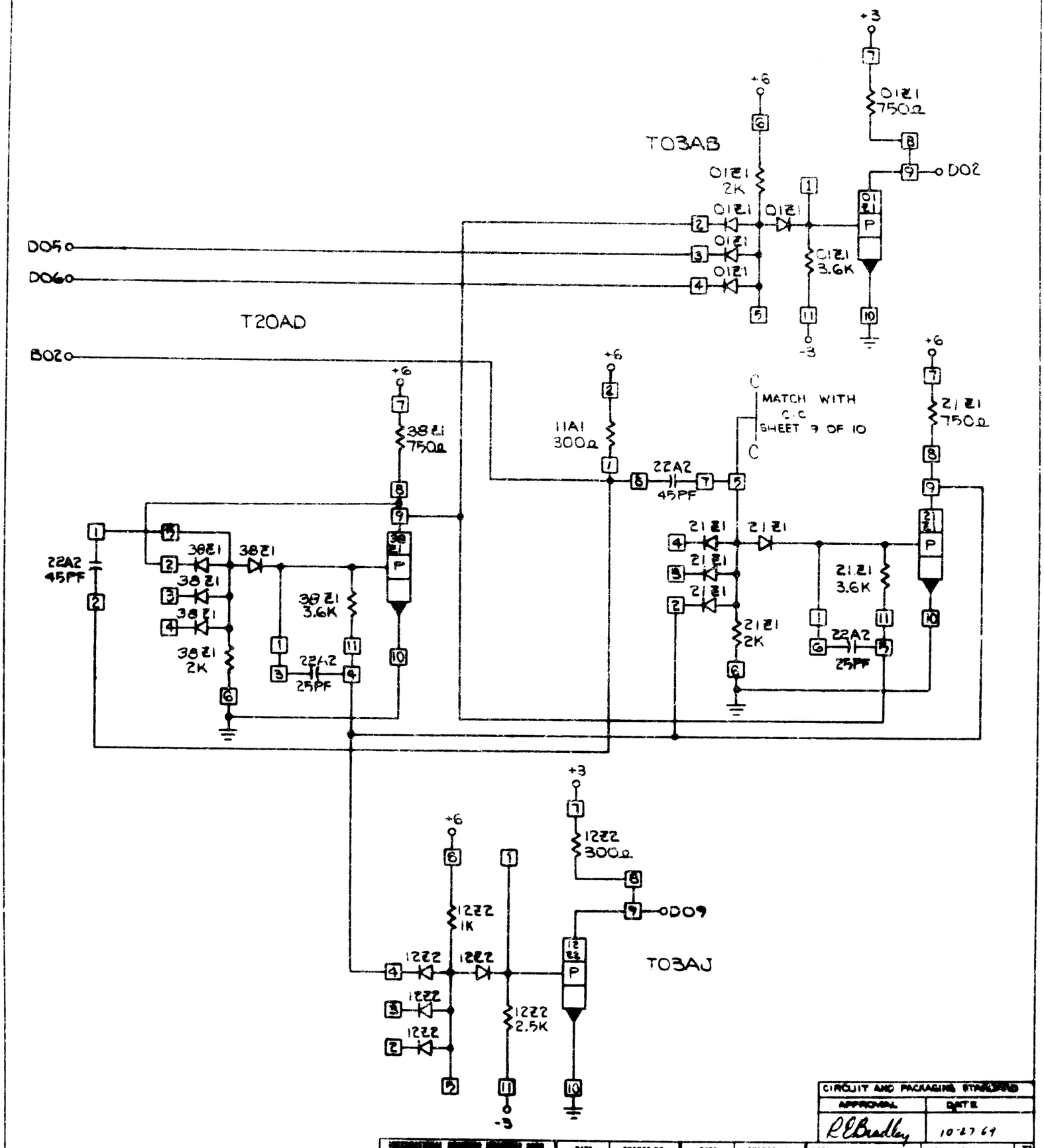

CIRCUIT AND PACKAGING STANDARD	
APPROVAL	DATE
R E Bradley	10-27-64

	DATE	CHANGE NO.	DATE	CHANGE NO.	NOTE	DEVELOPMENT NO.
	11-07-64	[illegible]			X PRINT TO ENG. SPEC. NO.	
	2-25-65	[illegible]				
	8-20-68	164644 C				

5804897