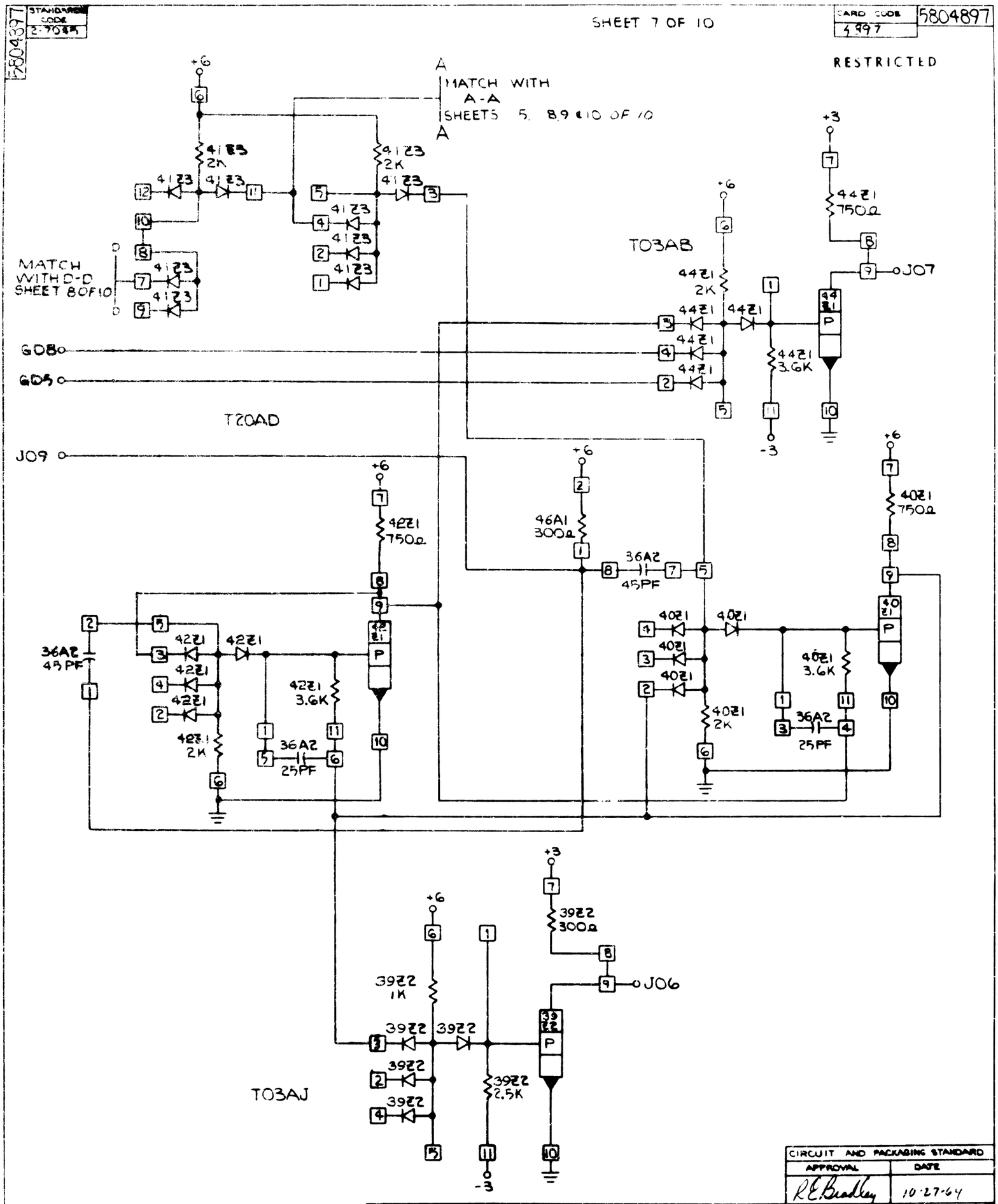
5804897
STANDARD CODE
SHEET 7 OF 10
CARD CODE
5804897
RESTRICTED
MATCH WITH A-A SHEETS 5, 8,9 & 10 OF 10
MATCH WITH D-D SHEET 8 OF 10
T03AB
T20AD
T03AJ
J07
J09
J06
G08
G09
+6
+3
-3
41Z3 2K
44Z1 750Ω
44Z1 2K
44Z1 3.6K
46A1 300Ω
36A2 45PF
42Z1 750Ω
42Z1 3.6K
42Z1 2K
36A2 25PF
40Z1 750Ω
40Z1 3.6K
40Z1 2K
39Z2 300Ω
39Z2 1K
39Z2 2.5K
CIRCUIT AND PACKAGING STANDARD
APPROVAL
DATE
R.E. Bradley
10-27-64
INTERNATIONAL BUSINESS MACHINES CORP.
CARD ASSY
TEST CTR-7 INT
DATE
CHANGE NO.
11-09-64 161899 A
7-23-65 163758 B
8-20-65 164644 C
NOTE
X PRINT TO ENG. SPEC. NO.
DEVELOPMENT NO.
5804897