CARD CODE 4897

RESTRICTED

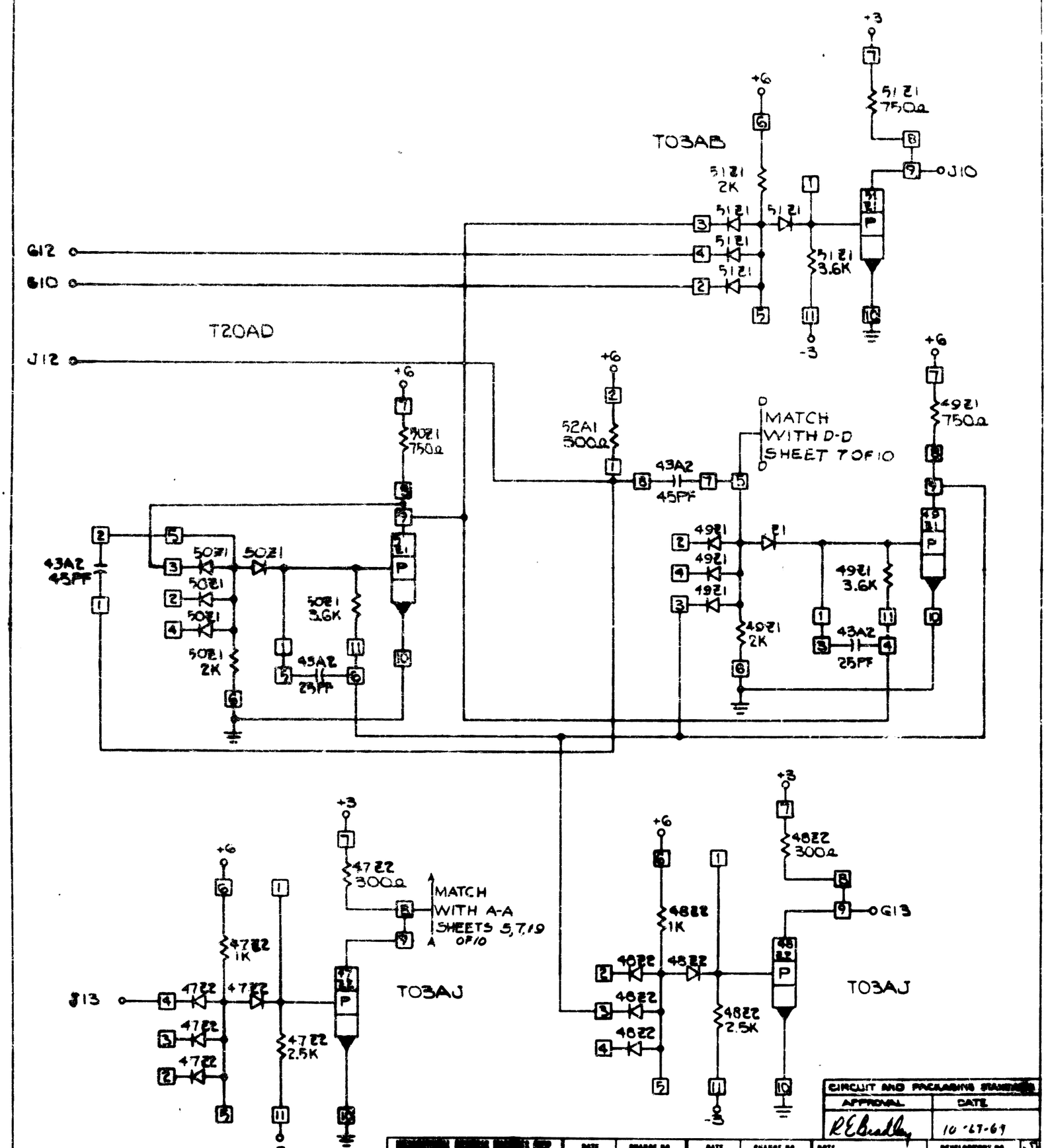

CIRCUIT AND PACKAGING STANDARD

APPROVAL	DATE
R E Bradley	10-27-64

DATE	CHANGE NO.		DATE	CHANGE NO.	DATE	DEVELOPMENT NO.
5-27-64	164899	A				
[illegible]	164248	B				
2-20-68	164677	C				

5804897