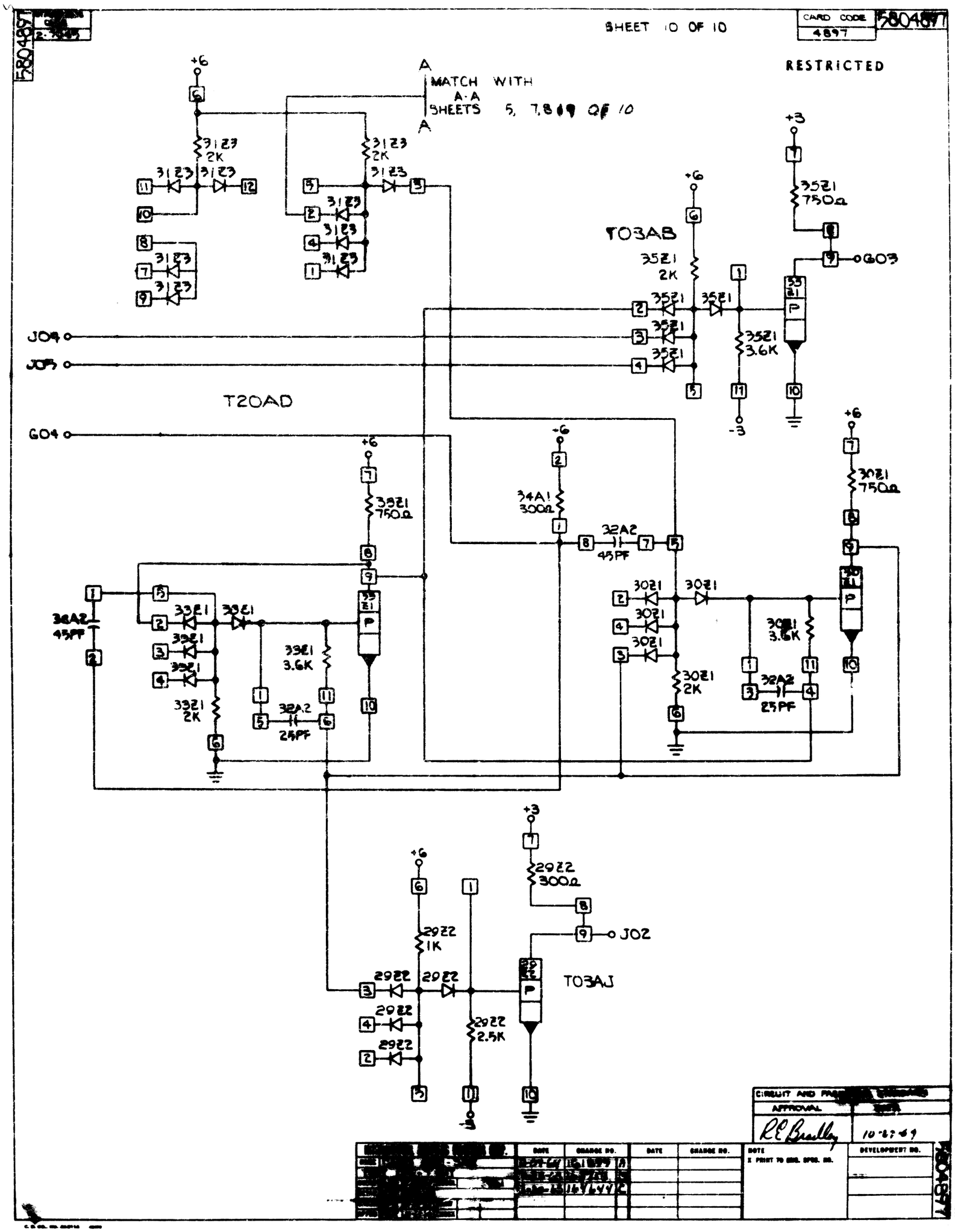
SHEET 10 OF 10
CARD CODE 4897
RESTRICTED
MATCH WITH A-A SHEETS 5, 7, 8 & 9 OF 10
T03AB
T20AD
T03AJ
J04
J05
G04
G03
J02
31Z3 2K
35Z1 750Ω
35Z1 2K
35Z1 3.6K
34A1 300Ω
32A2 45PF
32A2 25PF
30Z1 750Ω
30Z1 2K
30Z1 3.6K
33Z1 2K
33Z1 3.6K
29Z2 300Ω
29Z2 1K
29Z2 2.5K
CIRCUIT AND PRINTED WIRING APPROVAL
R.E. Bradley
10-27-69
DATE
CHANGE NO.
DEVELOPMENT NO.