RESTRICTED

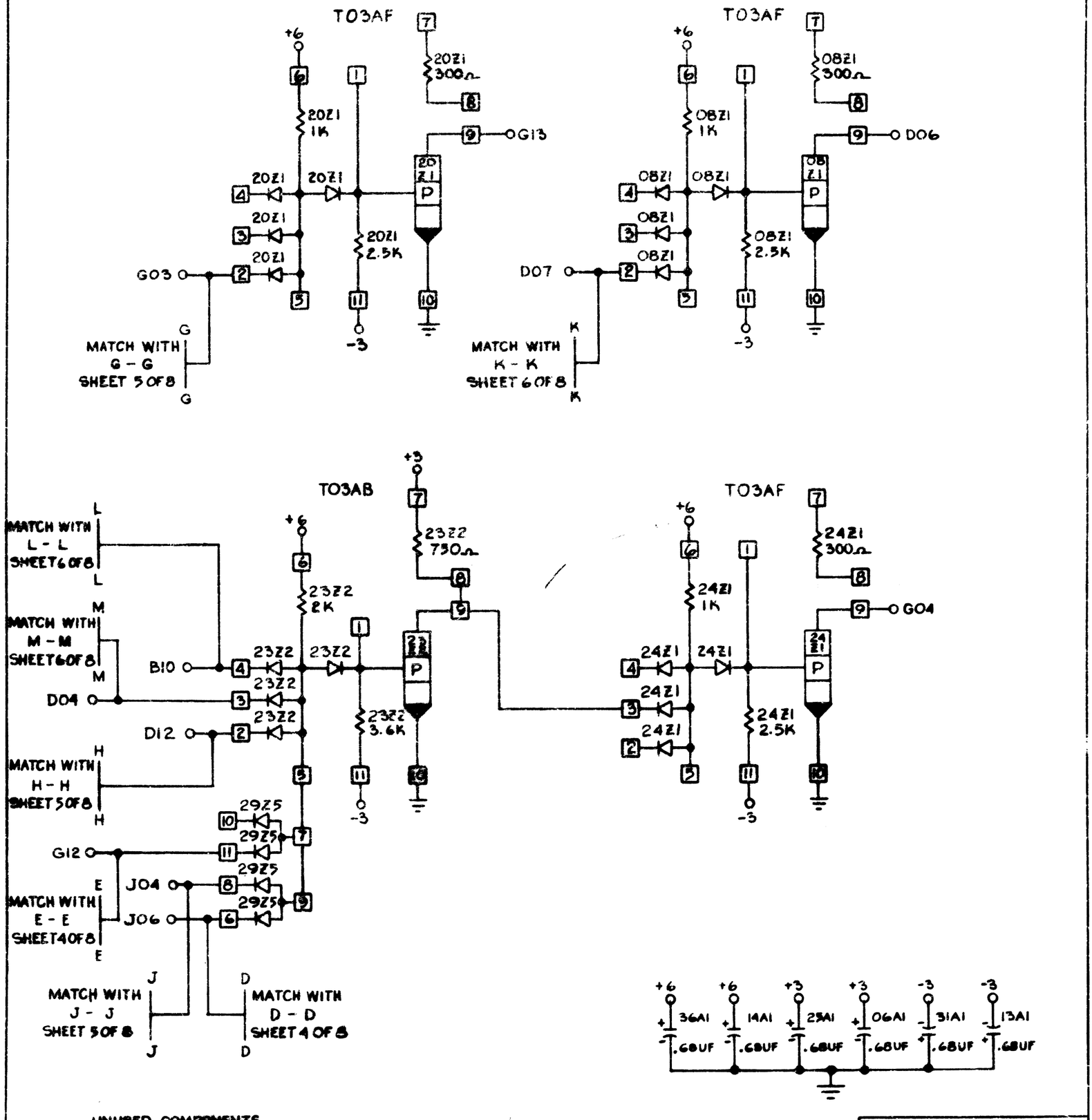

C

CIRCUIT AND PACKAGING STANDARD	
APPROVAL	DATE
	10-22-64

DATE	CHARGE NO.	APPROVAL	DATE	CHARGE NO.	APPROVAL	DEVELOPMENT NO.
						5804899