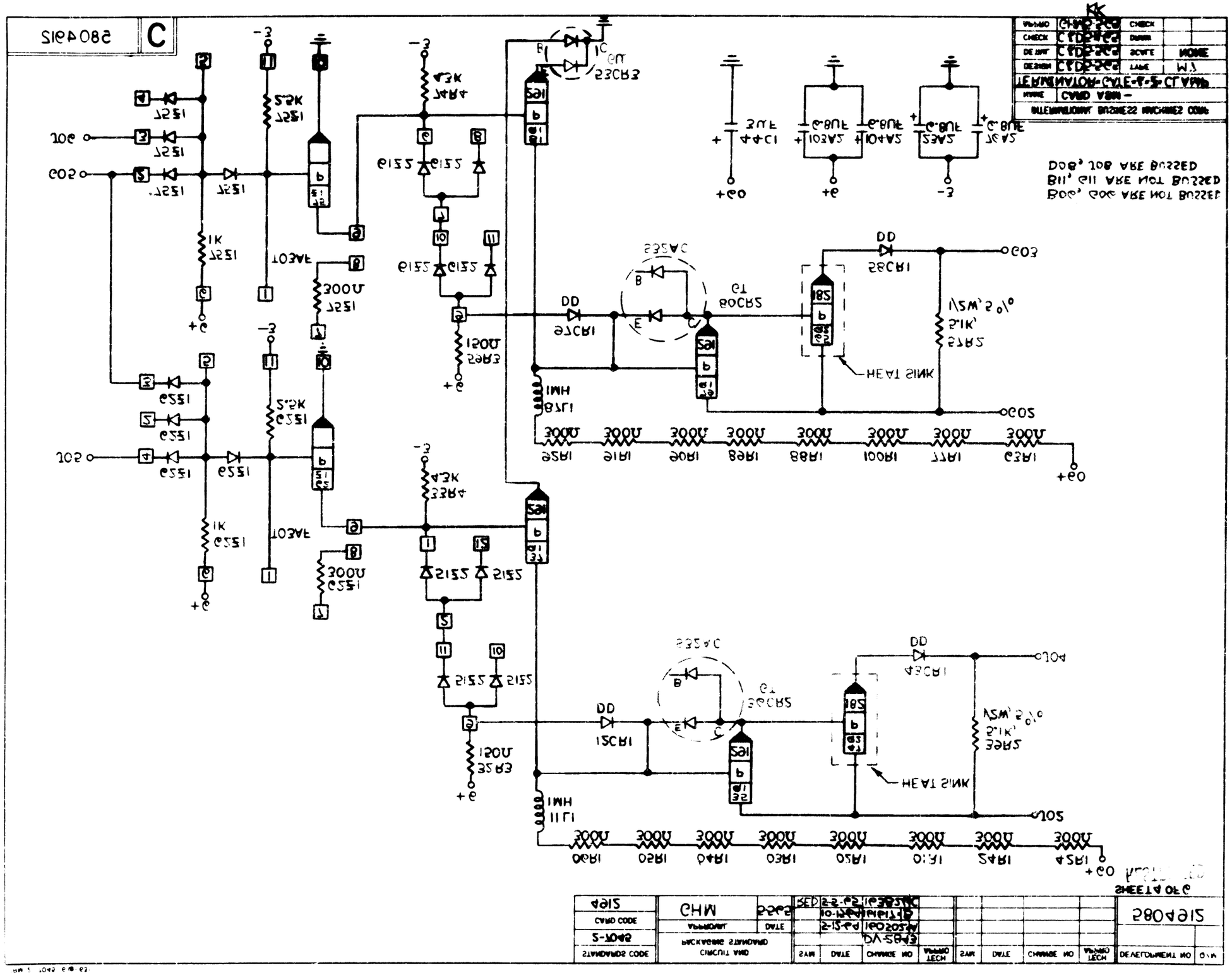
INTERNATIONAL BUSINESS MACHINES CORP.
CARD A8A
INTERMEDIATE-CYCLE-8-5-CLAMP
DESIGN
DRAWN
CHECK
SCALE
NONE
SIZE
C
DOB, DOC ARE NOT BUSSED
B11, C11 ARE NOT BUSSED
B06, C06 ARE NOT BUSSED
HEAT SINK
HEAT SINK
TO A1
TO A2
TO A3
TO A4
TO A5
TO A6
TO A7
TO A8
TO A9
TO A10
TO A11
TO A12
TO A13
TO A14
TO A15
TO A16
TO A17
TO A18
TO A19
TO A20
TO